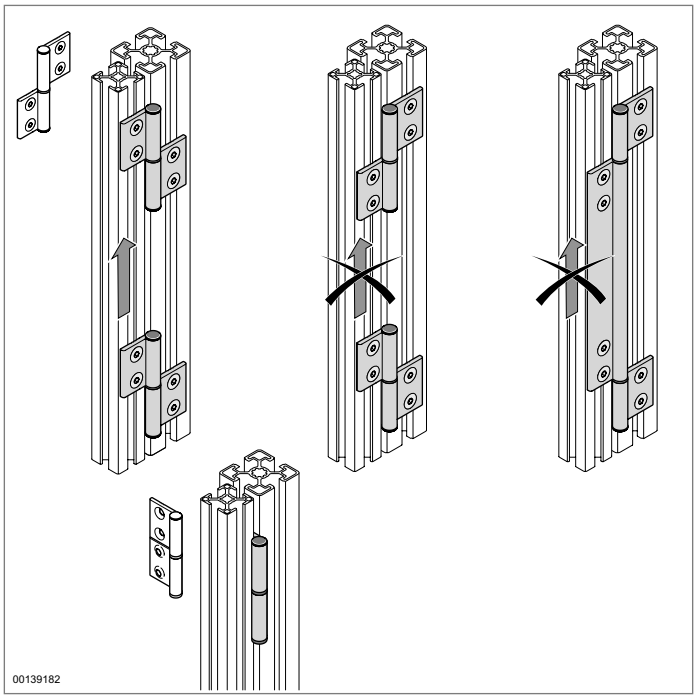

Hinge profile

- For self-assembly of hinges or hinge bands
- Possible to use as a non-transparent hinge band to fully cover the door gap
- Hinge profiles for slot dimensions 30 and 40/45/50 can also be combined for maximum flexibility
- For doors with profile frames or doors made of solid surface elements
- Assembly on exterior or interior
- Assembly as removable and non-removable hinges
- Opening to the right and left
- Centering slots as a drill guide for mounting bores
- Required finishing:
  - cut the hinge halves to length
  - drill for fixing

Required accessories:
- hinge pins
- T-nut M6 (p. 3-4)
- screw ISO 10642 M6x12 (8 mm slot)
- screw ISO 10642 M6x16 (10 mm slot)

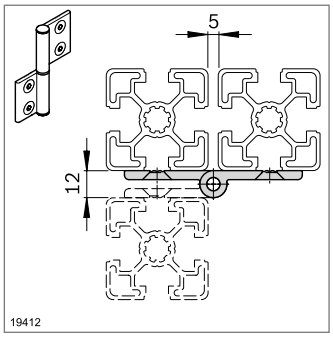

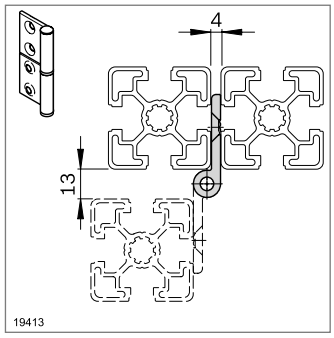

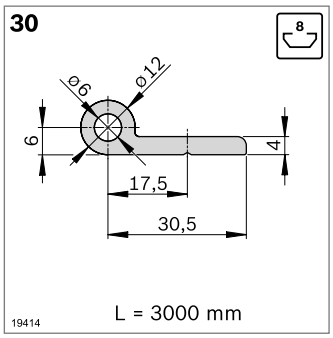

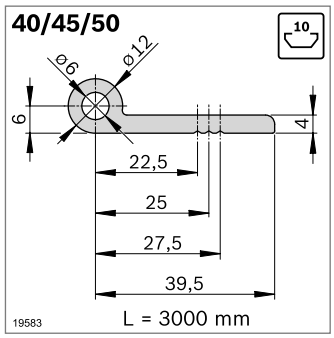

Hinge profile	L (mm)		No.
30	3000	10	**3 842 543 371**
40/45/50	3000	10	**3 842 543 372**

Material: Aluminum, anodized

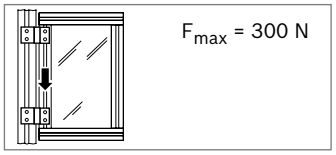

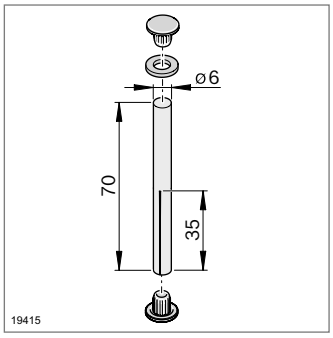

Hinge pins		No.
	10	**3 842 544 661**

Material: Grooved pin: steel; galvanized
Washer, cap: PA

Scope of delivery: Incl. grooved pin, 2 x cap, washer

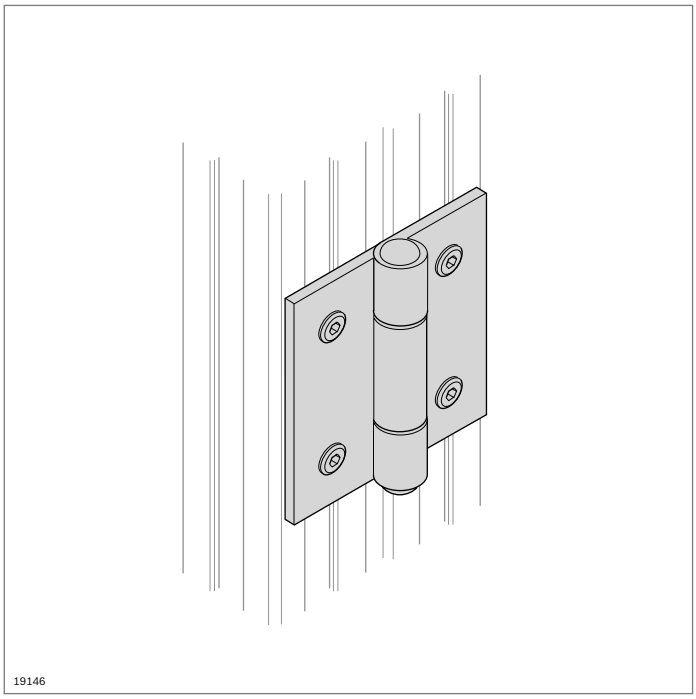

Hinge

- Assembly possible on solid surface elements
- For small doors and flaps
- Steel hinge for profiles with 6 mm slot

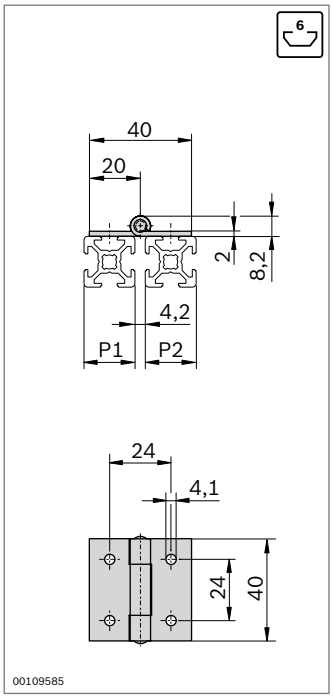

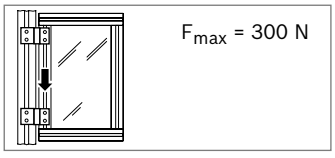

FS1

ISO 7380
M4x6

Hinge	P1 (mm)	P2 (mm)	ESD		No.	FS
	20	20		2	**3 842 535 684**	4xFS1

Material: Steel, stainless
Fastening material: steel; galvanized
Scope of delivery: Incl. fastening material (FS)

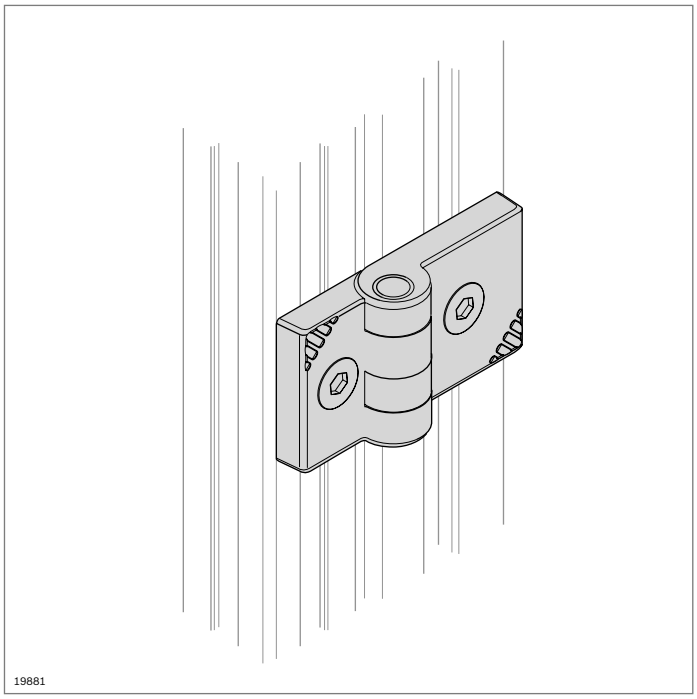

Hinge, plastic

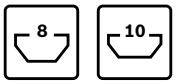

- Plastic hinge for profiles with 8 mm or 10 mm slot
- Assembly possible on solid surface elements
- Centering bolts for easy assembly and as a anti-torsion element

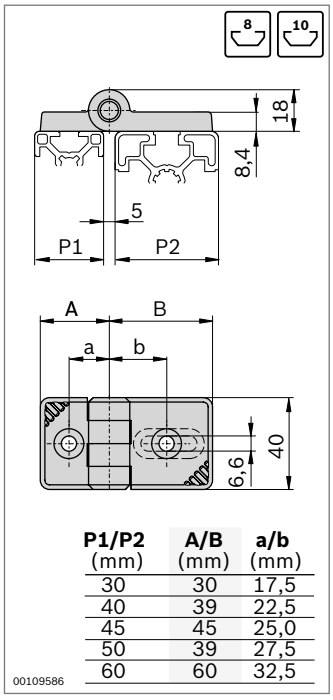

P1/P2 (mm)	A/B (mm)	a/b (mm)
30	30	17,5
40	39	22,5
45	45	25,0
50	39	27,5
60	60	32,5

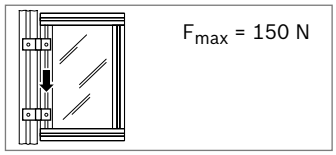

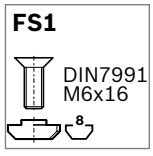

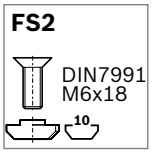

Hinge, plastic	P1 (mm)	P2 (mm)		No.	FS
	30	30	2	**3 842 544 500**	2xFS1
	30	40/50	2	**3 842 544 501**	1xFS1, 1xFS2
	30	45	2	**3 842 544 502**	1xFS1, 1xFS2
	30	60	2	**3 842 544 503**	1xFS1, 1xFS2
	40/50	40/50	2	**3 842 544 504**	2xFS2
	45	45	2	**3 842 544 505**	2xFS2
	45	60	2	**3 842 544 506**	2xFS2
	60	60	2	**3 842 544 507**	2xFS2

Material: PA; black
Hinge axle: steel; galvanized
Fastening material: steel; galvanized

Scope of delivery: Incl. fastening material (FS)

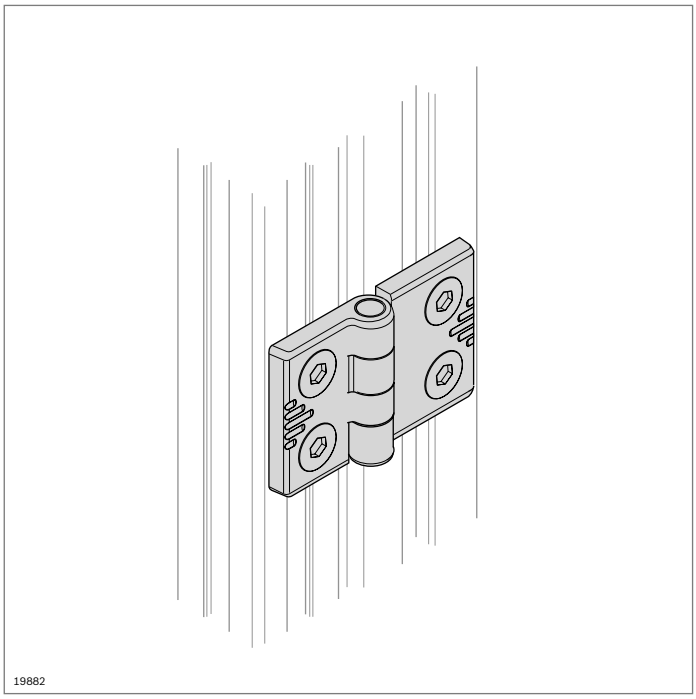

Hinge, aluminum

- Aluminum hinge for all slot systems
- Assembly possible on solid surface elements
- High-quality version
- Conductive version
- Suitable for use under cleanroom conditions thanks to wear-resistant guide bushings

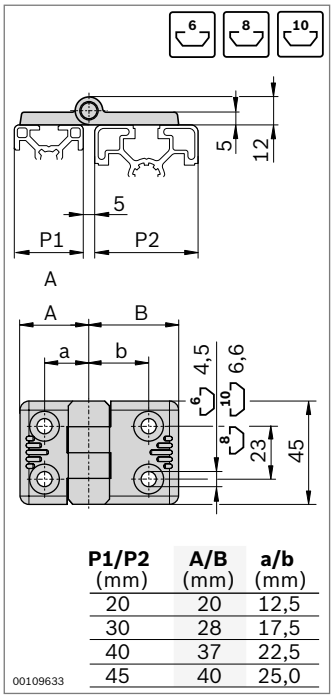

P1/P2 (mm)	A/B (mm)	a/b (mm)
20	20	12,5
30	28	17,5
40	37	22,5
45	40	25,0

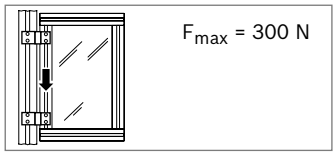

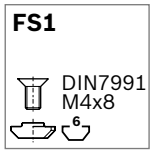

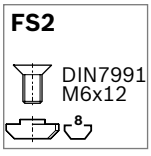

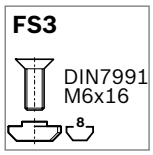

Hinge, aluminum	P1 (mm)	P2 (mm)	ESD		No.	FS
	20	20		2	**3 842 544 525**	4xFS1
	20	30		2	**3 842 544 526**	2xFS1, 2xFS2
	30	30		2	**3 842 544 527**	4xFS2
	30	40		2	**3 842 544 528**	2xFS2, 2xFS3
	30	45		2	**3 842 544 529**	2xFS2, 2xFS3
	40	40		2	**3 842 544 530**	4xFS3
	45	45		2	**3 842 544 531**	4xFS3

Material: Diecast aluminum; nickel-plated
Fastening material: steel; galvanized
Scope of delivery: Incl. fastening material (FS)

Fraunhofer
IPA
TESTED DEVICE
Report No. BO 9903-159

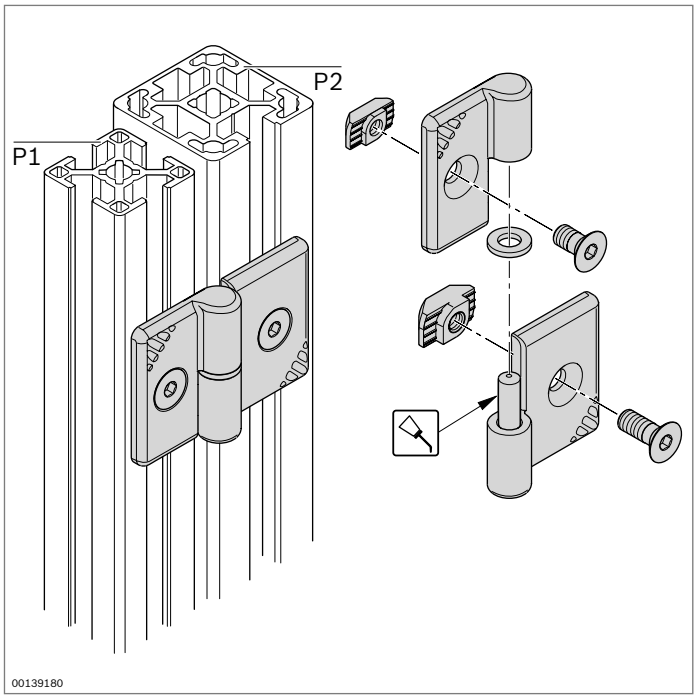

LIFTOFF hinge

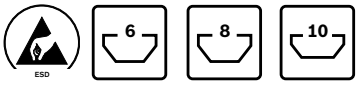

designLINE

- Removable compact hinge, opening to the right or left
- *designLINE* version with special silver paint (RAL 9006) for an attractive, high-quality design
- Centering lugs as an assembly aid and twist lock

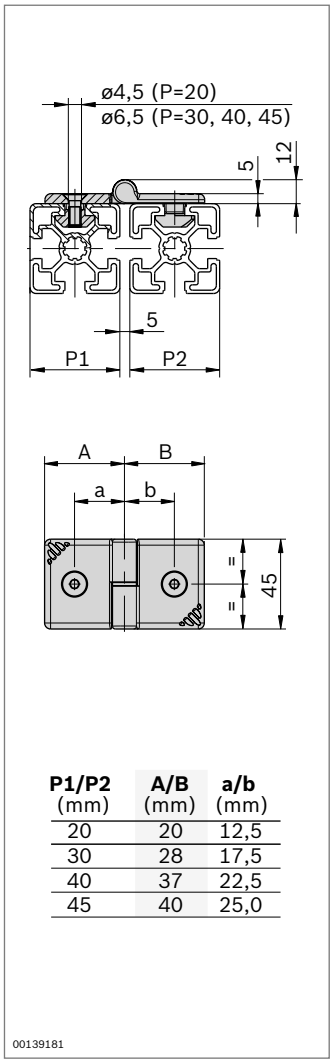

P1/P2 (mm)	A/B (mm)	a/b (mm)
20	20	12,5
30	28	17,5
40	37	22,5
45	40	25,0

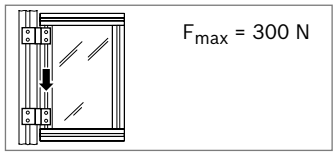

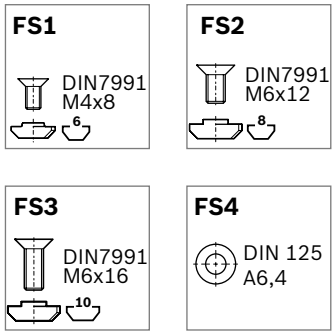

LIFTOFF hinge	P1 (mm)	P2 (mm)		No.	FS
right	20	20	2	**3 842 543 334**	2xFS1, FS4
	20	30	2	**3 842 543 333**	FS1, FS2, FS4
	30	30	2	**3 842 543 332**	2xFS2, FS4
	30	40	2	**3 842 543 331**	FS2, FS3, FS4
	30	45	2	**3 842 543 330**	FS2, FS3, FS4
	40	40	2	**3 842 543 329**	2xFS3, FS4
	45	45	2	**3 842 543 328**	2xFS3, FS4
left	20	20	2	**3 842 543 327**	2xFS1, FS4
	20	30	2	**3 842 543 326**	FS1, FS2, FS4
	30	30	2	**3 842 543 325**	2xFS2, FS4
	30	40	2	**3 842 543 324**	FS2, FS3, FS4
	30	45	2	**3 842 543 323**	FS2, FS3, FS4
	40	40	2	**3 842 543 322**	2xFS3, FS4
	45	45	2	**3 842 543 321**	2xFS3, FS4

Material: Hinge: diecast aluminum, painted
Fastening material: steel; galvanized
Grooved pin: steel; galvanized
Washer: PA

Scope of delivery: Incl. fastening material (FS)

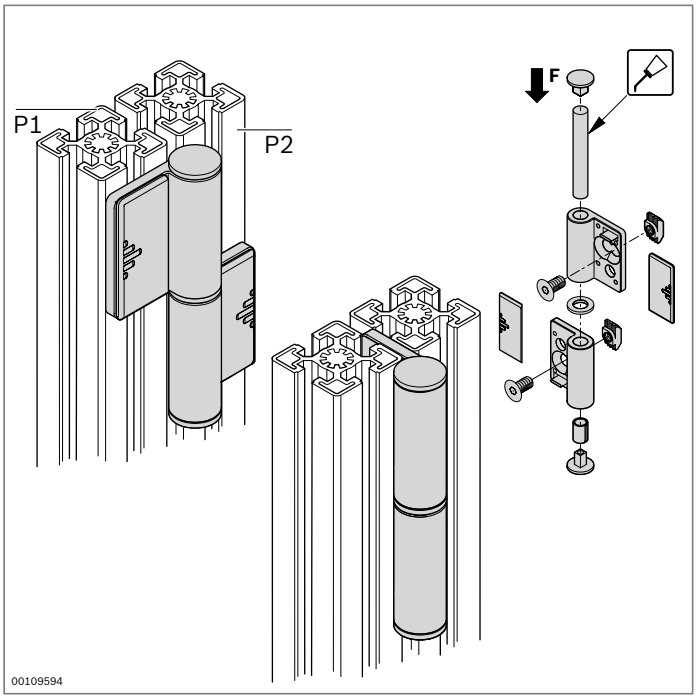

Hinge, removable

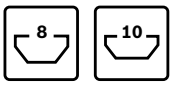

- For constructing large, heavy doors
- Removable
- For left and right stop
- Externally mounted: Opening angle approx. 180°
- Internally mounted: prevents removal by unauthorized persons, e.g. on protective barriers

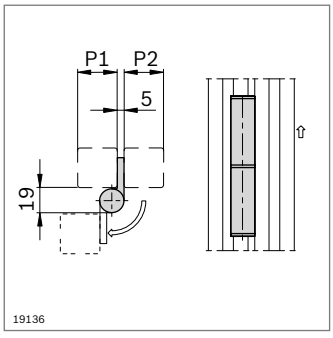

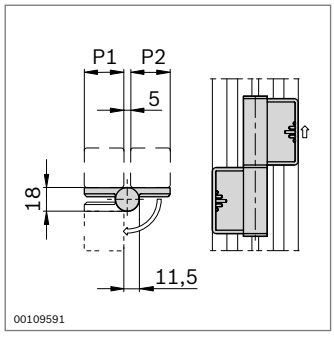

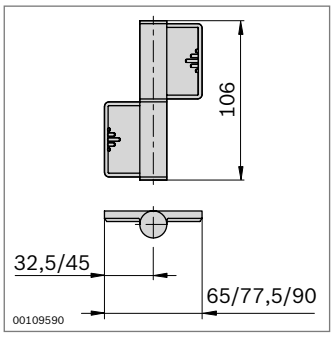

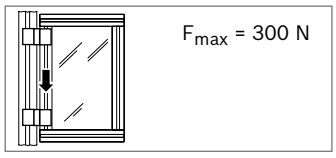

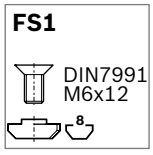

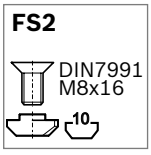

Hinge, removable	P1 (mm)	P2 (mm)		No.	FS
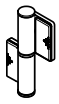	30	30	2	**3 842 544 552**	2xFS1
	30	45	2	**3 842 544 553**	1xFS1,
	30[1)]	60			1xFS2
	45	45	2	**3 842 544 554**	2xFS2
	45[1)]	60			
	60[1)]	60			

[1)] Not suitable for installing on inner side

Material: Hinge: diecast zinc
Cap: PA; black
Fastening material: steel; galvanized

Scope of delivery: Incl. fastening material (FS), 2 x cap

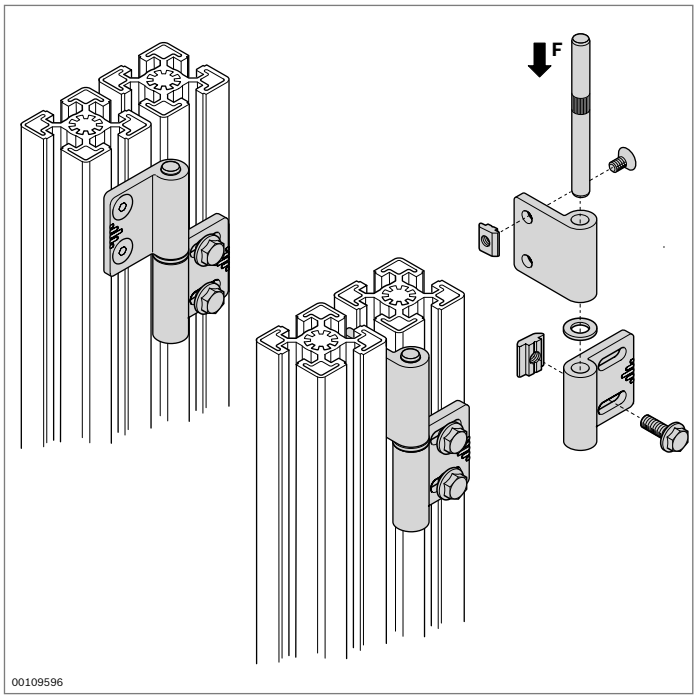

Hinge, adjustable

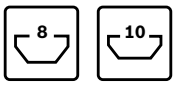

- For constructing large, heavy doors
- Adjustable for compensating clearance tolerances
- Removable
- For left and right stop
- Opening angle approx. 180°

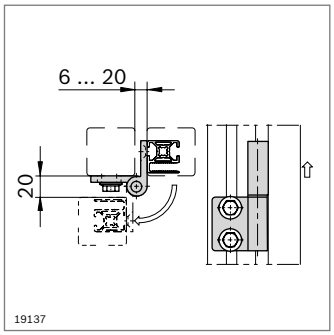

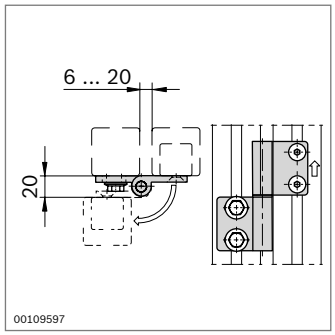

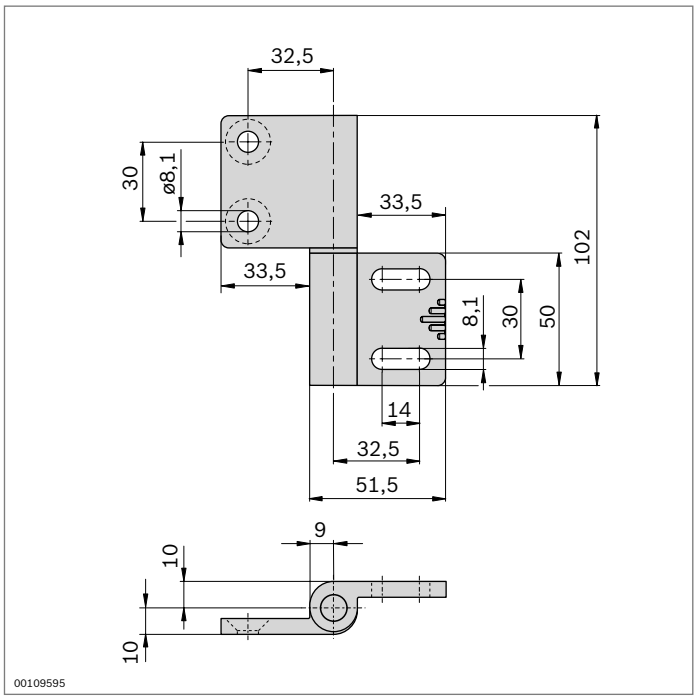

Hinge, adjustable		No.	FS
	2	**3 842 544 562**	2xFS1, 2xFS2

Material: Diecast aluminum
Fastening material: steel; galvanized
Scope of delivery: Incl. fastening material (FS)

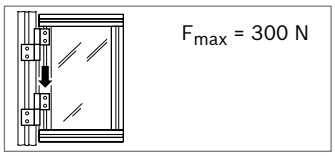

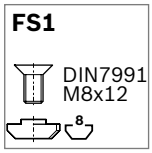

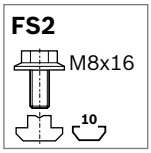

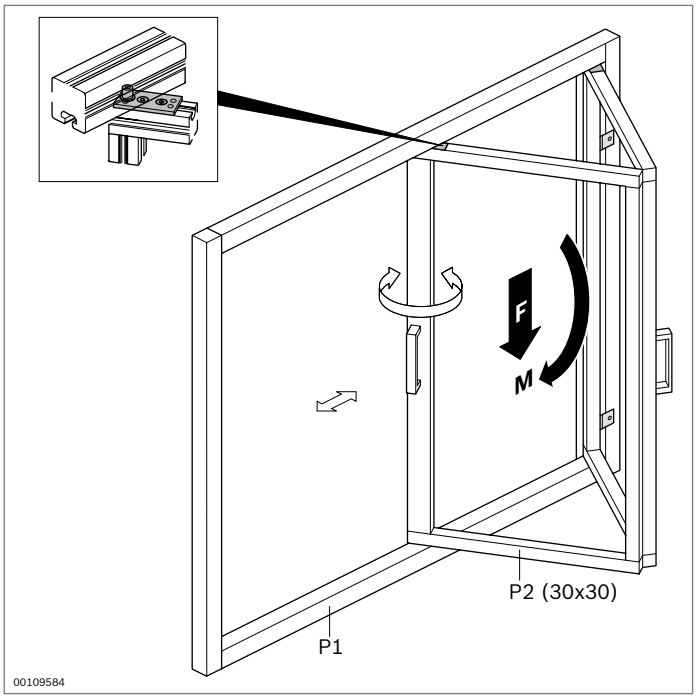

Folding door element

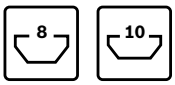

- For a simultaneous swinging and sliding action on folding doors made of 30 mm profiles
- Extremely long service life (approx. 50,000 actuations)
- Suitable for frames made of profiles with 8 mm and 10 mm slot
- The frame and door profile are always flush (the guide ring position depends on the thickness of the frame profile)

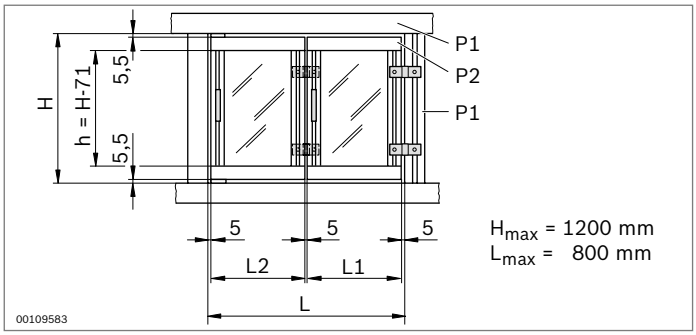

P2 (mm)	**P1** (mm)	**L1** (mm)	**L2** (mm)
30X30	45x45	0.5L - 29.5	0.5L + 14.5
	40x40	0.5L - 28.3	0.5L + 13.3
	30x30	0.5L - 25.8	0.5L + 10.8

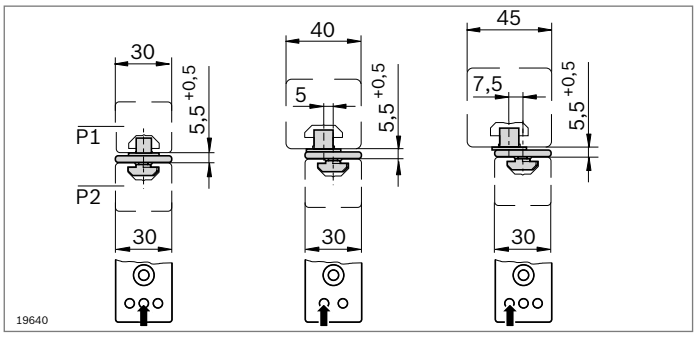

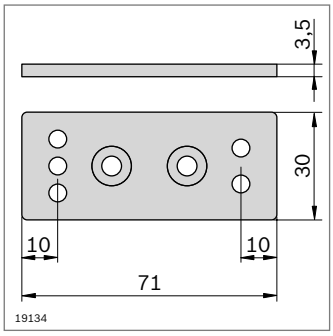

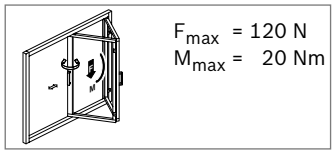

FS1

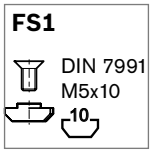

Folding door element	**No.**	**FS**
	3 842 516 715	2xFS1

Material: Folding door element: diecast zinc
Guide ring: PA; black
Fastening material: steel; galvanized

Scope of delivery: Incl. fastening material (FS)

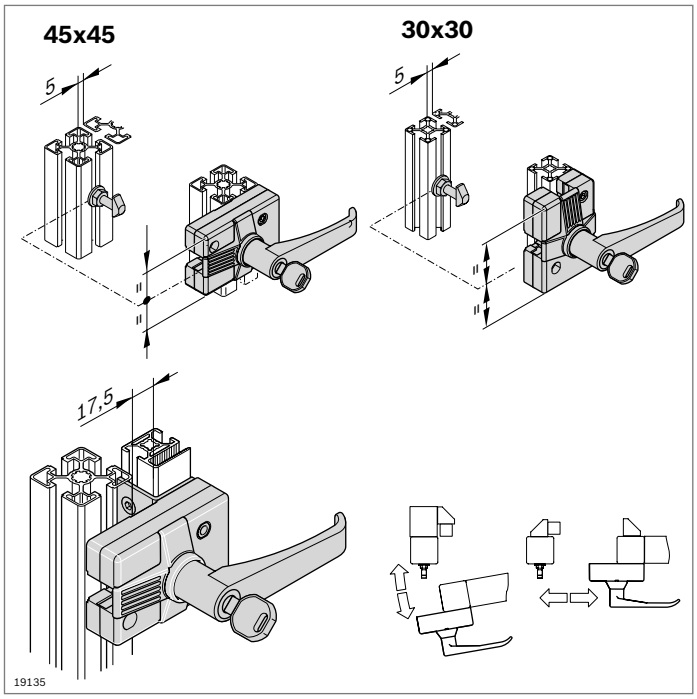

Lock for swing and sliding doors

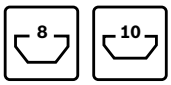

- Opening to the right and left
- Suitable for profiles 45x45 and 30x30
- “Standard locking” variant with random key selection (each lock has a different key)
- “Uniform locking” always uses the same key
- Version with door handle or as two-way lock

Accessories:
Adapter plate

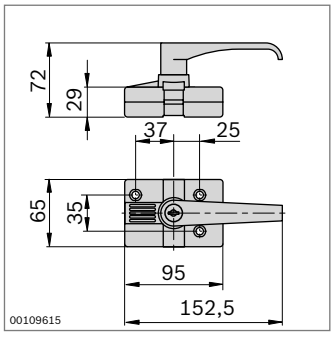

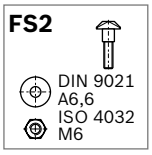

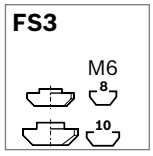

Door lock		No.	FS
Standard locking	30x30, 45x45	**3 842 525 821**	2xFS1, 1xFS2, 3xFS3
Uniform locking	30x30, 45x45	**3 842 525 822**	2xFS1, 1xFS2, 3xFS3

Material: Housing: die-cast aluminum
Door handle: PA, black
Fastening material: steel; galvanized
Scope of delivery: Incl. 3 keys,
Fastening material (FS)

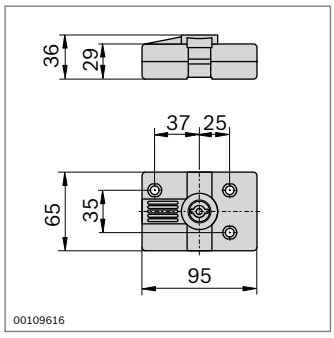

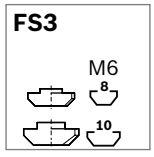

Door lock		No.	FS
	30x30, 45x45	**3 842 525 823**	2xFS1, FS2, 3xFS3

Material: Diecast aluminum
Fastening material: steel; galvanized
Scope of delivery: Incl. 1 x two-way key, fastening material (FS)

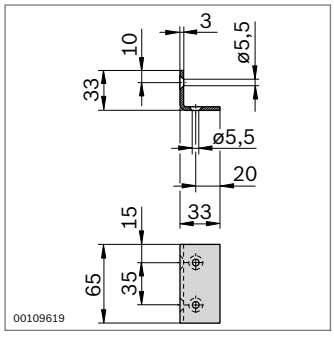

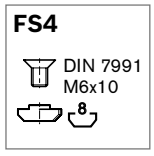

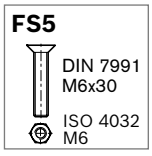

- Adapter plate for mounting the door lock on an EcoSafe protective frame (p. 10-4)

Adapter plate	No.	FS
	3 842 523 243	2xFS4, 2xFS5

Material: Steel, galvanized
Fastening material: steel; galvanized
Scope of delivery: Incl. fastening material (FS)

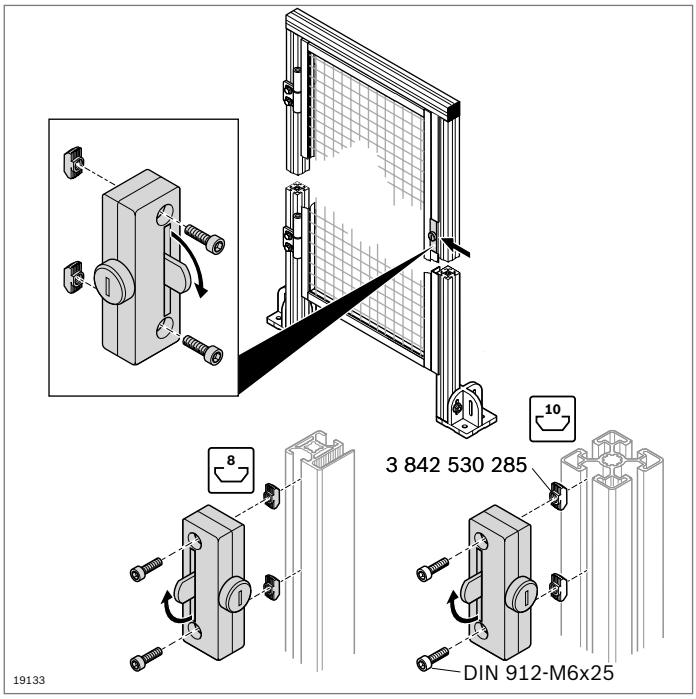

Door lock

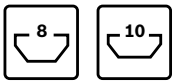

- For doors which open to the right or left
- For frame profile 30x30 WG (EcoSafe protective fence system); incl. fastening material
- “Standard locking” variant with random key selection (each lock has a different key)
- “Uniform locking” variant always has the same key

Accessories for mounting on profile with 10 mm slot:

- 2 x T-nut M6, **3 842 530 285** (p. 3-4)
- 2 x screw DIN 912-M6x25

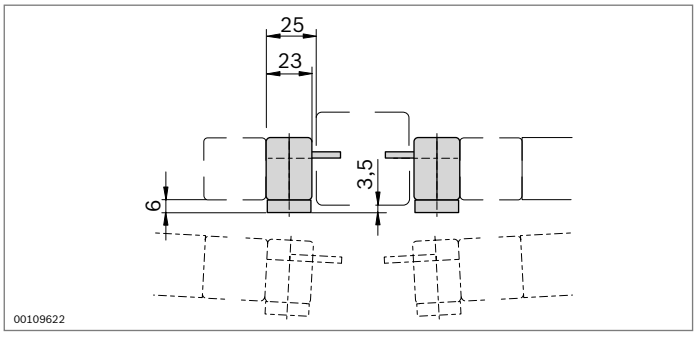

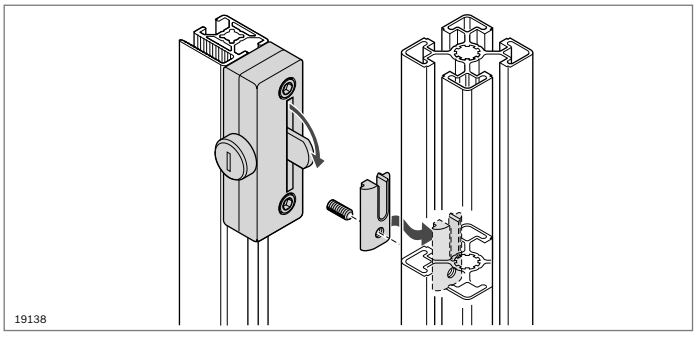

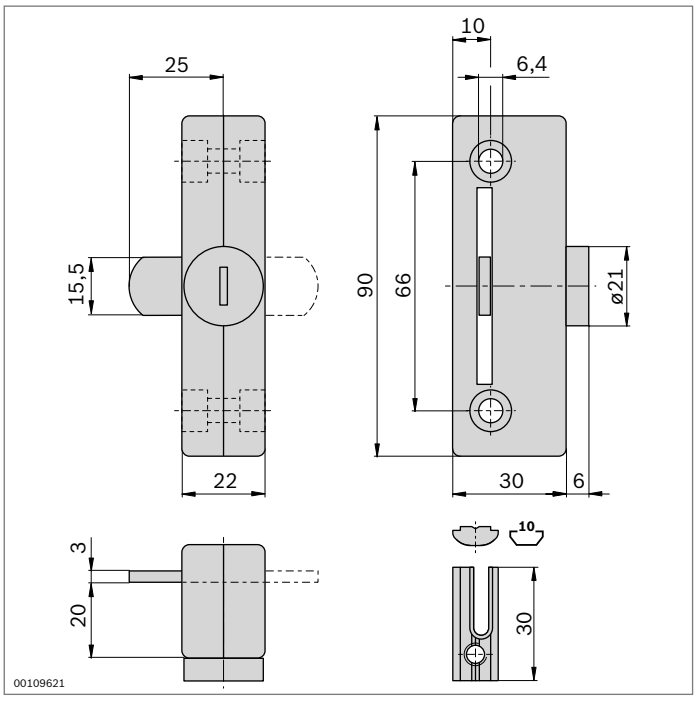

Door lock	No.	FS
Standard locking	**3 842 522 479**	2xFS1, 1xFS2
Uniform locking	**3 842 523 320**	2xFS1, 1xFS2

Material: Diecast zinc
Fastening material: steel; galvanized

Scope of delivery: Incl. 3 keys,
Fastening material (FS)

FS1

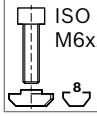

ISO 4762
M6x22

FS2

DIN 914
M6x10

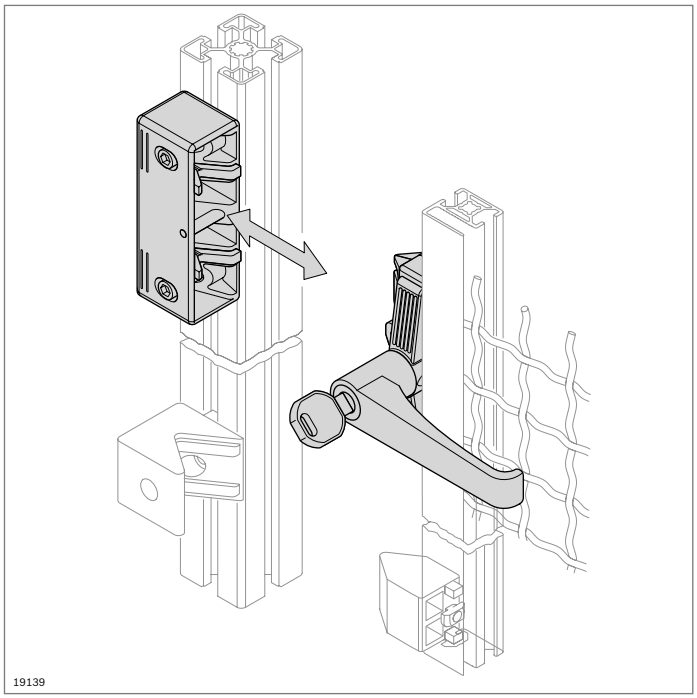

Door lock for EcoSafe sliding doors

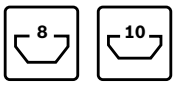

- For doors which open to the right or left
- “Standard locking” variant with random key selection (each lock has a different key)
- “Uniform locking” variant always has the same key

Accessories, optional:
Stop kit for cushioned closing of the doors (p. 12-5)

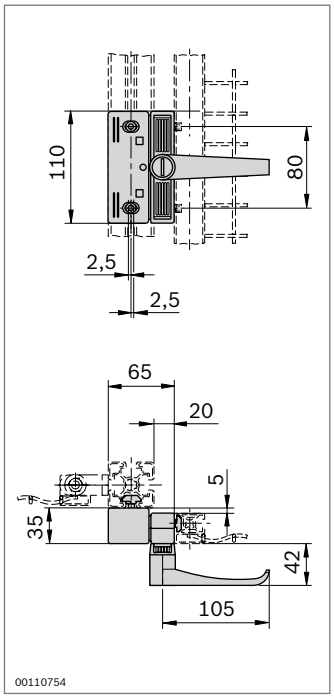

FS1

DIN 7984
M6x40

FS2

DIN 912
M6x12

Door lock for sliding doors	No.	FS
Standard locking	**3 842 525 946**	2xFS1, 2xFS2
Uniform locking	**3 842 525 947**	2xFS1, 2xFS2

Material:	Housing: die-cast aluminum Door handle: PA, black Fastening material: steel; galvanized
Scope of delivery:	Incl. 3 keys, Fastening material (FS)

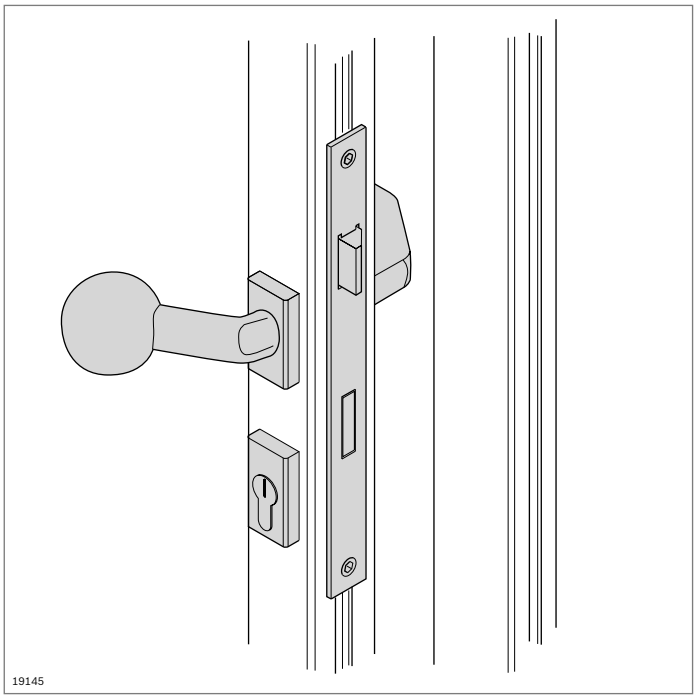

Mortise lock
Door handle

- For installation in profile size 45x45 or larger
- Robust, heavy-duty design
- Suitable for installing a standard lock cylinder
- Door handle in the variants handle/handle and handle/knob
- Profile machining: milling

Accessories:
standard lock cylinder

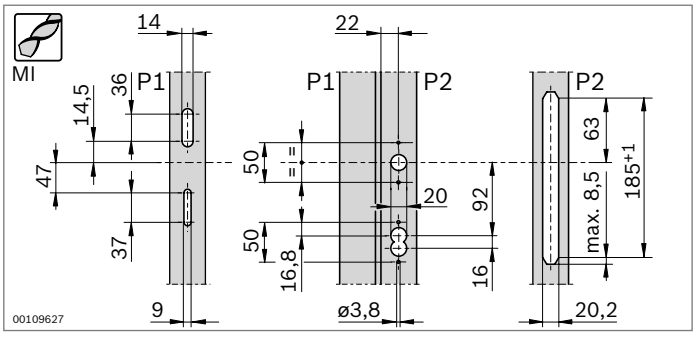

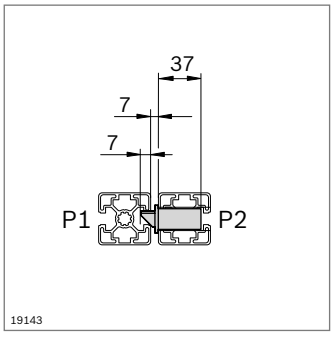

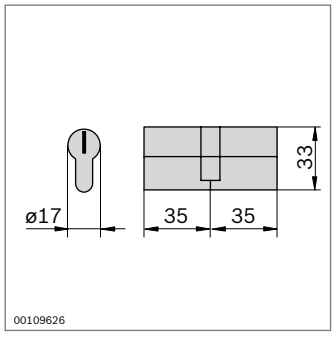

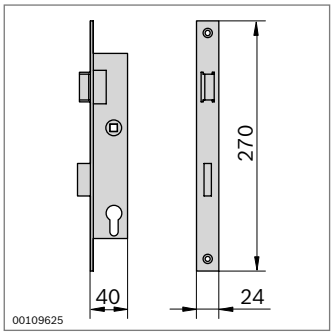

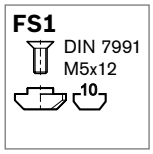

Mortise lock	No.	FS
	3 842 538 241	2xFS1

Material: Steel; galvanized
Scope of delivery: Incl. fastening material (FS)

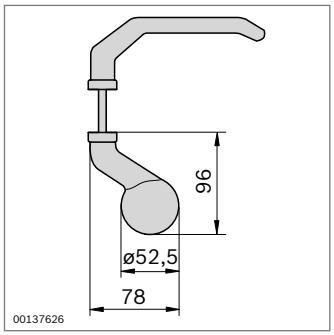

FS2

ISO 7051
4,8x22

FS3

DIN 7991
M5x10
10

Door handle / door knob	No.	FS
	3 842 542 684	8xFS2, 8xFS3

Material: Light metal
Fastening material: steel; galvanized
Scope of delivery: Incl. rosette, fastening material (FS)

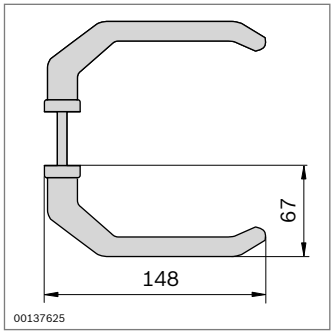

FS2

ISO 7051
4,8x22

FS3

DIN 7991
M5x10
10

Handle/handle	No.	FS
	3 842 542 683	8xFS2, 8xFS3

Material: Light metal
Fastening material: steel; galvanized
Scope of delivery: Incl. rosette, fastening material (FS)

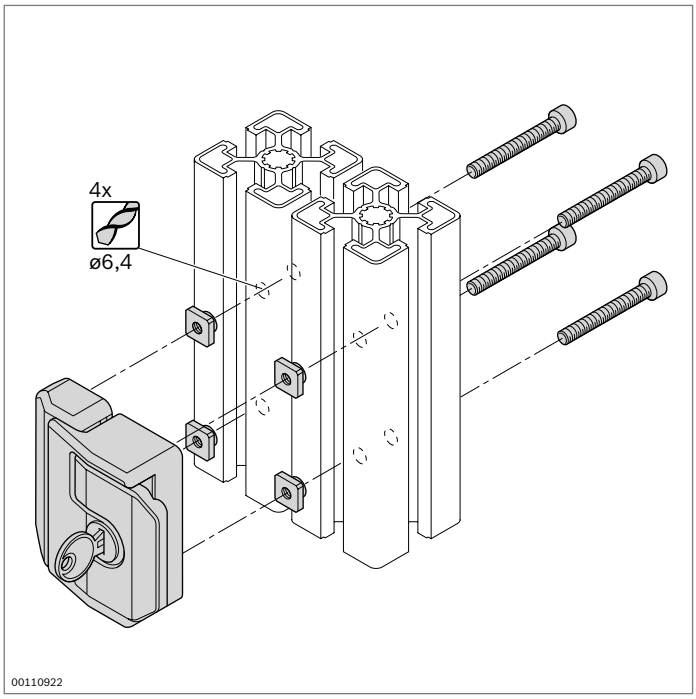

Door lock for swing doors

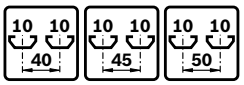

- For doors which open to the right or left
- Self-locking in the closed position
- Smooth closing
- Ergonomically designed folding handle for opening
- “Standard locking” variant with random key selection (each lock has a different key)
- “Uniform locking” variant always has the same key
- Profile machining: drilling of hole D6.4

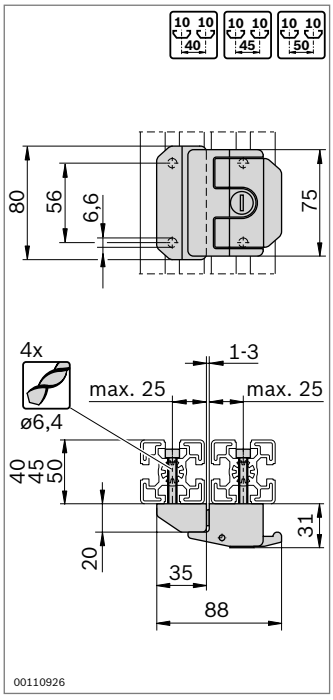

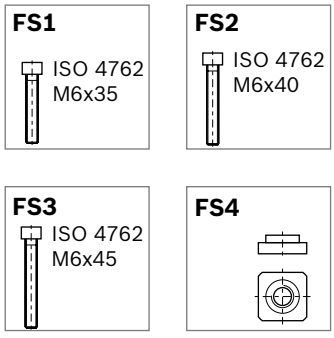

Door lock	No.	FS
Standard locking	**3 842 530 353**	4xFS1, 4xFS2, 4xFS3, 4xFS4
Uniform locking	**3 842 530 352**	4xFS1, 4xFS2, 4xFS3, 4xFS4

Material: diecast zinc; black powder-coated
Fastening material: steel; galvanized
Scope of delivery: Incl. 2 keys,
Fastening material (FS)

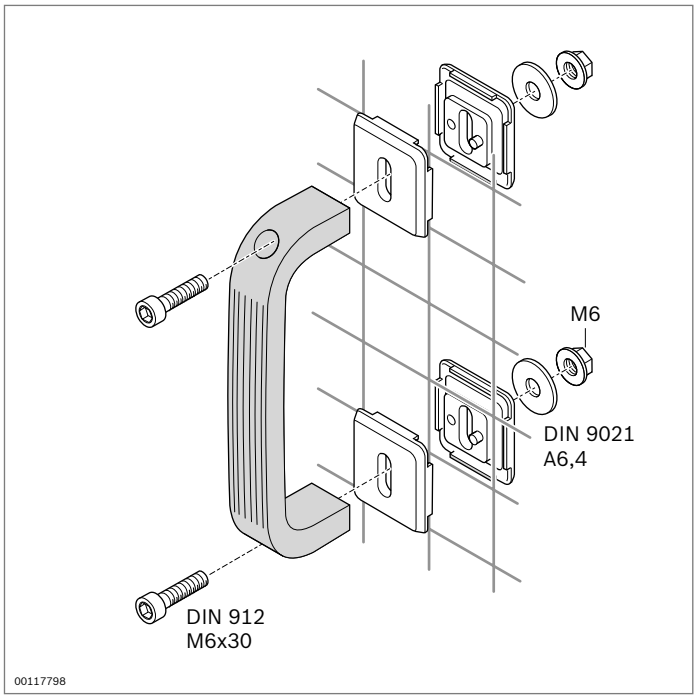

Bow-type handle

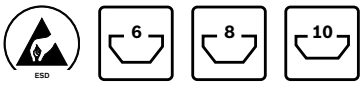

Bow-type handle

- Robust construction equipped to withstand strong forces
- Fastening in the profile slot or on a woven wire grille with the clamping element
- Suitable for use in ESD-protected environments

Accessories, optional:

- clamping element for mounting on woven wire grille (p. 10-19)
- T-nut (p. 3-4)

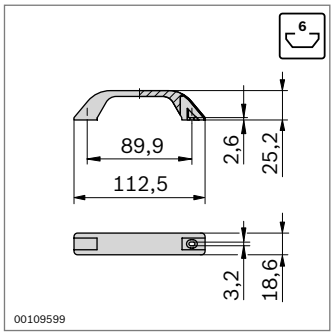

Bow-shaped handle		No.
	10	**3 842 518 738**

Material: PE; black

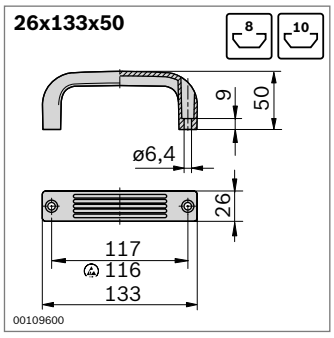

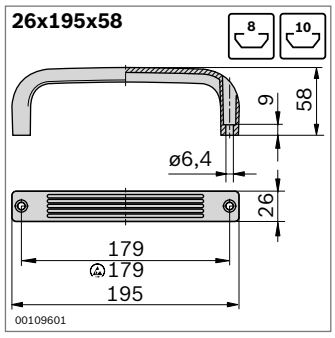

Bow-shaped handle	ESD		No.
26x133x50		10	**3 842 525 480**
	ESD	10	**3 842 525 481**
26x195x58		10	**3 842 525 766**
	ESD	10	**3 842 525 767**

Material: PA; black

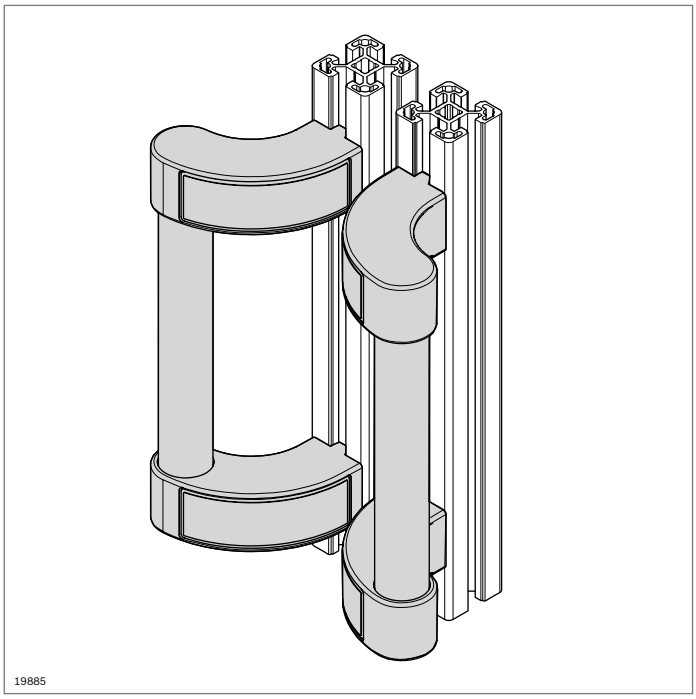

Safety handle

- Prevents injuries caused by catching of body parts when closing sliding doors
- Suitable for sliding or swing doors
- The length of the handle can be varied by changing the tube D28

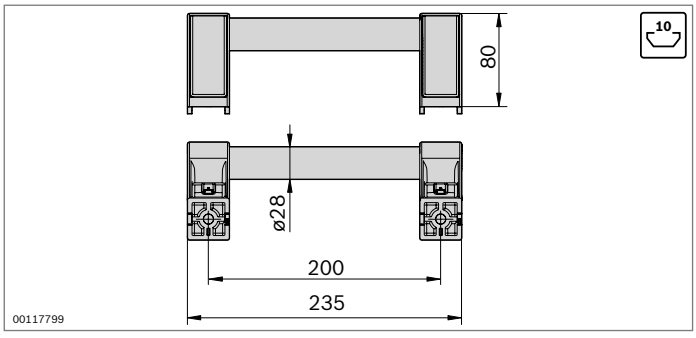

Safety handle	No.	FS
	3 842 536 556	2xFS1

Material: Round tube D28: Aluminum, anodized
Holder: PA; black

Scope of delivery: Incl. fastening material (FS)

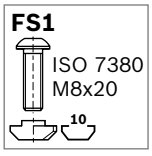

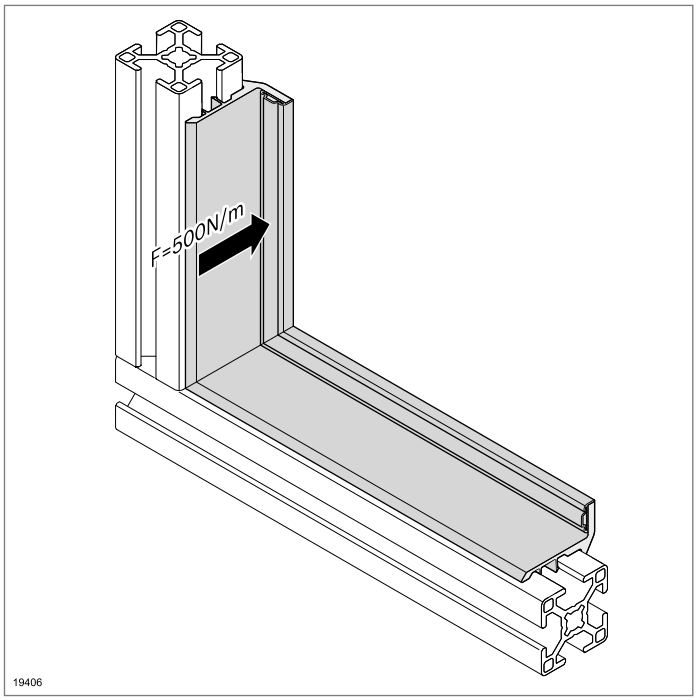

Sealing strip

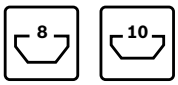

- For sealing doors (width > 500 mm) with an elastic lip seal
- Can be clipped into the slot
- Non-transparent elastic lip seal covers the door gap
- Stop for swing doors (impact force: 500 N/m)
- For flush-closing doors

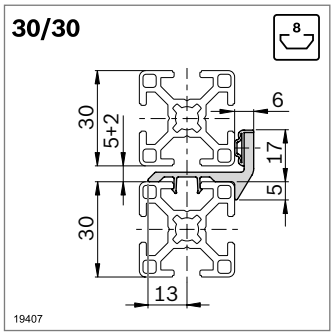

Sealing strip	L (mm)		No.
30/30	3000	10	**3 842 543 412**
Material:	PVC/TPE, light gray RAL 7035		

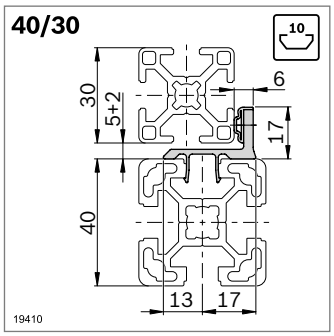

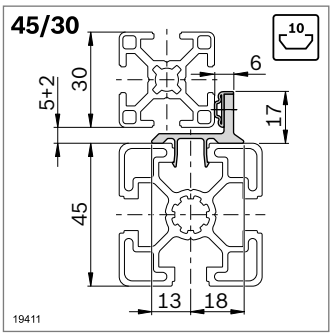

Sealing strip	L (mm)		No.
40/30	3000	10	**3 842 543 411**
45/30	3000	10	**3 842 543 410**
Material:	PVC/TPE, light gray RAL 7035		

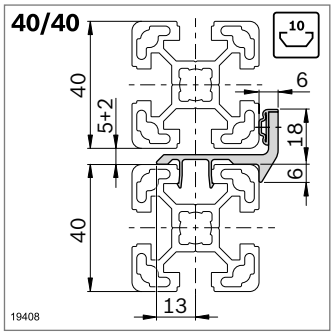

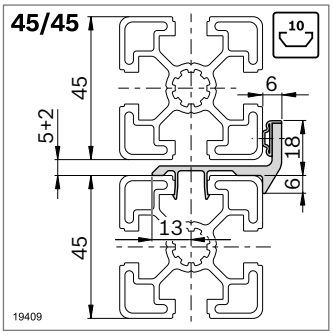

Sealing strip	L (mm)		No.
40/40	3000	10	**3 842 543 409**
45/45	3000	10	**3 842 543 408**
Material:	PVC/TPE, light gray RAL 7035		

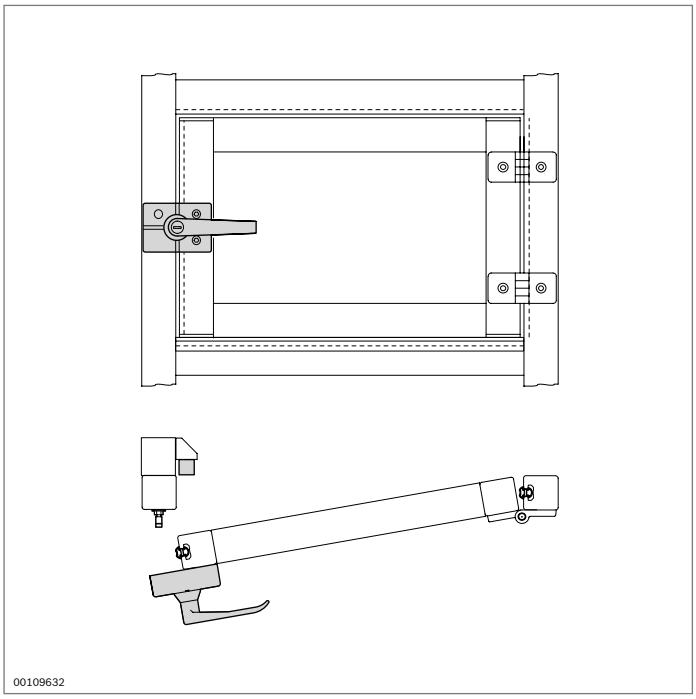

Sealing profile

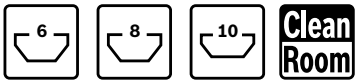

- For sliding and swing doors
- Prevents particles from entering or escaping

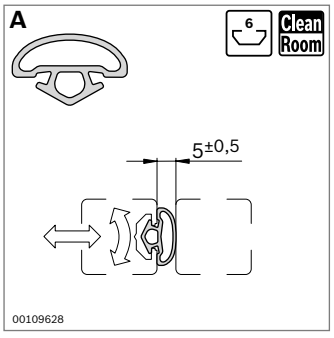

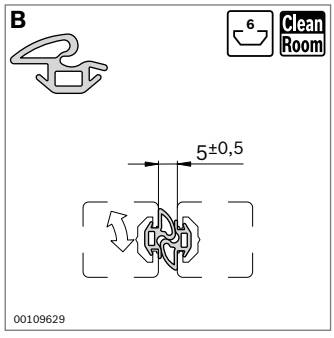

- Suitable for use in cleanroom environments
- Two-piece seal (**B**) also performs a stop function.

Sealing profile	Slot	L (mm)	No.
A	6	10000	**3 842 524 623**
B	6	10000	**3 842 524 622**

Material: TPE; light gray RAL 7035, hardness: 64° ± 5 shore A

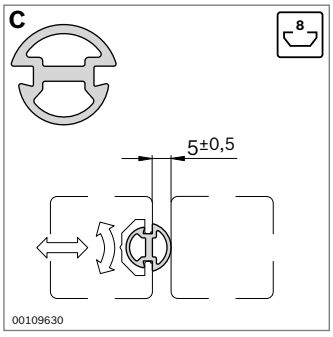

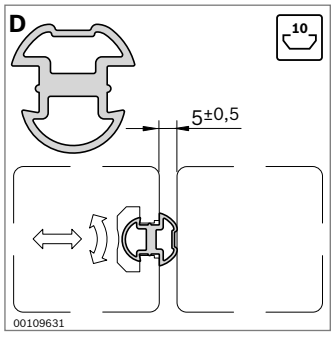

Sealing profile	Slot	L (mm)	No.
C	8	10000	**3 842 516 598**
D	10	10000	**3 842 518 492**

Material: NBR; black, hardness 60° shore A

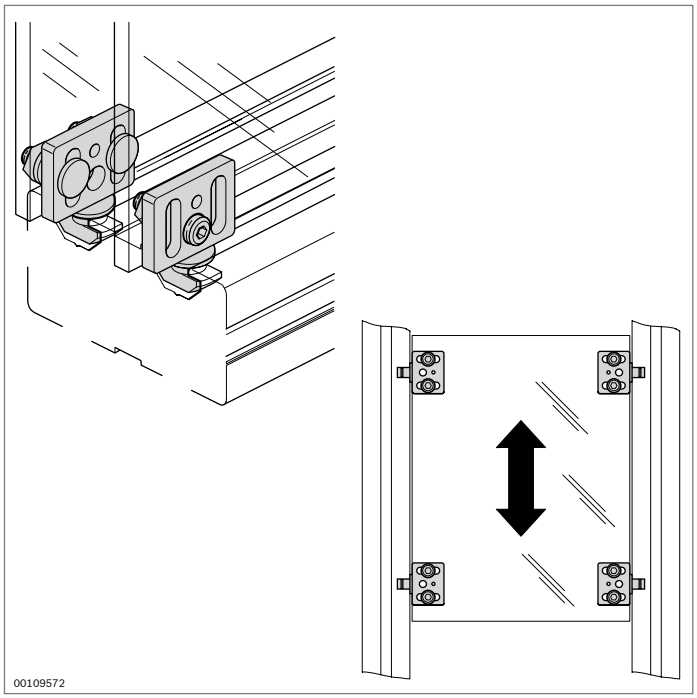

Slider

10

- For constructing inexpensive sliding and lifting doors
- Good functional reliability

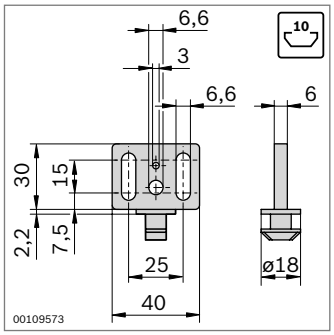

Slider		No.
	10	**3 842 530 303**
Material:	POM; black	

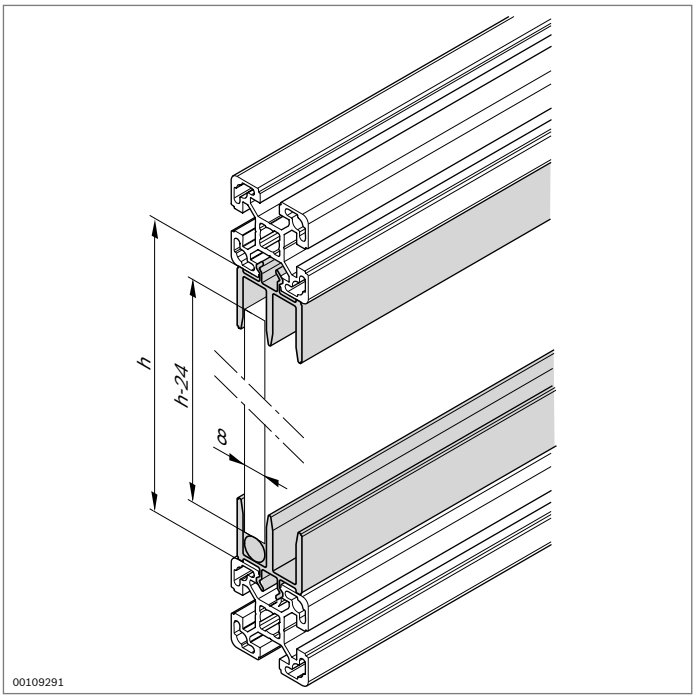

Sliding door profile PVC

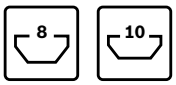

- Can be clipped into the supporting frame made of strut profiles
- Round rod to minimize the displacement force required
- For surface elements of a thickness of 8 mm
- Insertion of the surface element into closed frame

Accessories, optional:

- Edge protector (p. 8-26)
- Door handle profile (p. 8-26)
- Bow-type handle (p. 8-17)

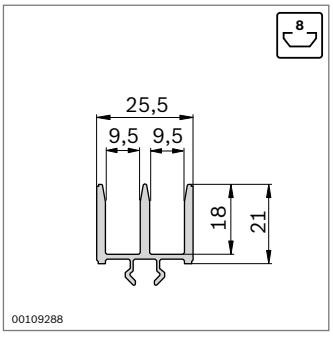

Sliding door profile PVC	Slot	L (mm)		No.
	8	2000	10	**3 842 526 588**

Material: PVC; black

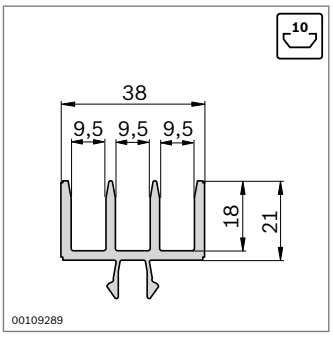

Sliding door profile PVC	Slot	L (mm)		No.
	10	2000	10	**3 842 526 591**

Material: PVC; black

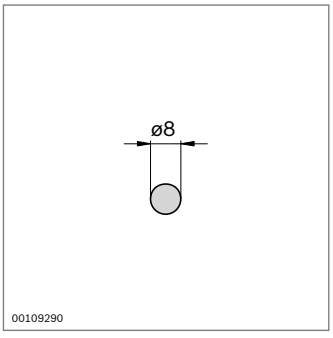

Round rod	L (mm)		No.
	2000	10	**3 842 516 694**

Material: PE; black

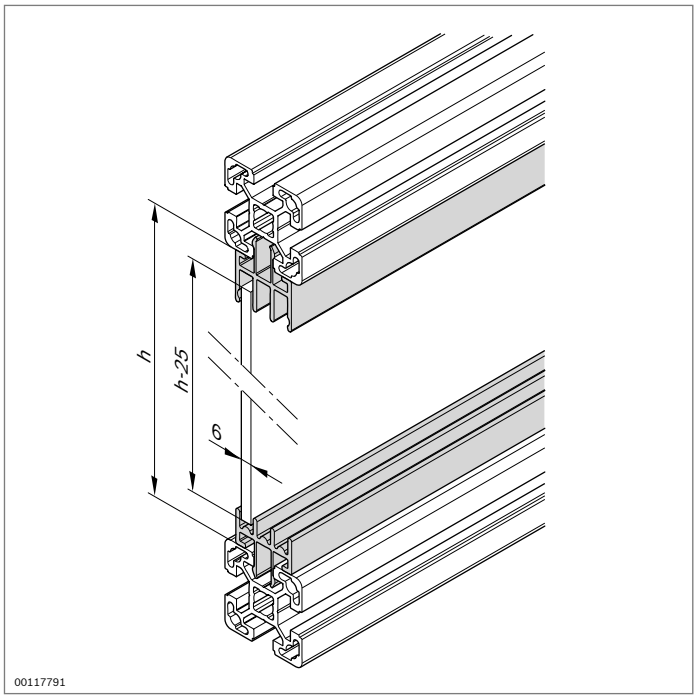

Sliding door profile Al Clip

- Can be clipped into the supporting frame made of strut profiles
- Sliding door profile, bottom, with half-round floor contour to minimize the displacement force required
- For surface elements with a thickness of 5 or 6 mm
- Insertion of the surface element into closed frame

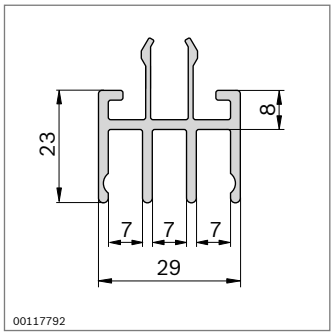

Sliding door profile, top		L (mm)	No.
1 pc		40 ... 3000	**3 842 993 425 / L**
10 pcs		3000	**3 842 536 531**

Material: Aluminum, anodized

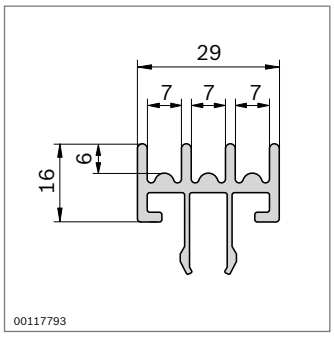

Sliding door profile, bottom		L (mm)	No.
1 pc		40 ... 3000	**3 842 993 426 / L**
10 pcs		3000	**3 842 536 532**

Material: Aluminum, anodized

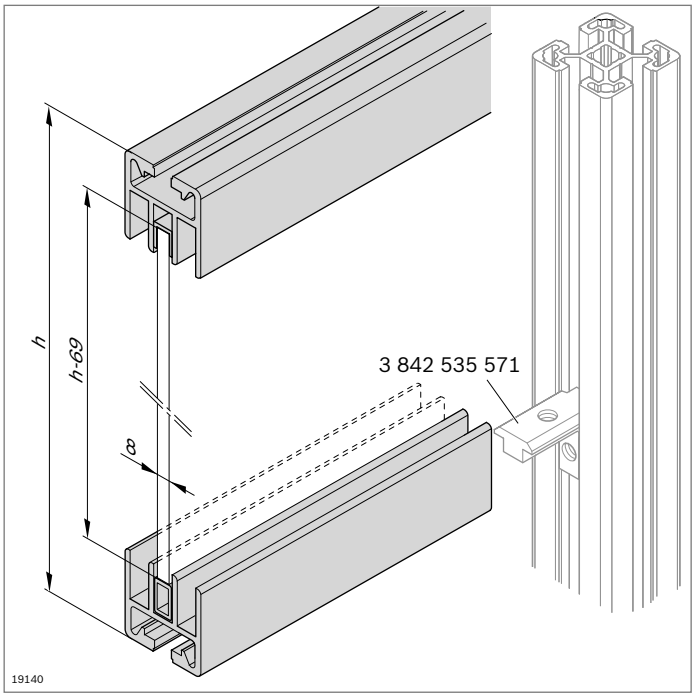

Sliding door profile Al 45
Cap, end piece

Sliding door profile Al 45

- Aluminum profile as a supporting construction element
- Installation using inner brackets between two vertical struts
- Slide profile to edge the upper part of the sliding door
- Insertion profile acts as a slide surface
- For surface elements of a thickness of 8 mm
- Insertion of the surface element into closed frame

Accessories:

- cap (p. 8-25)
- end piece (p. 8-25)
- inner bracket (p. 3-13), inner bracket R (p. 3-14)

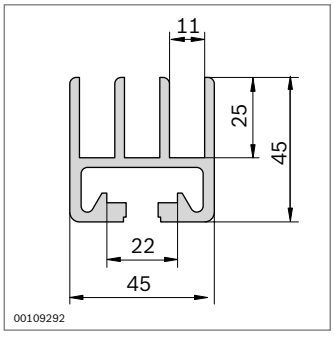

Sliding door profile		L (mm)	No.
1 pc		100 ... 5600	**3 842 990 115 / L**
1 pc	F1 F1	100 ... 5600	**3 842 990 116 / L**
20 pcs		5600	**3 842 509 177**

Material: Aluminum, anodized

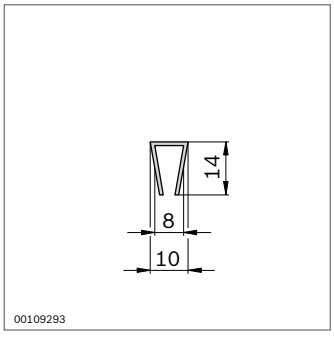

Slide profile	L (mm)		No.
	3000	10	**3 842 146 905**

Material: Hard PVC, black

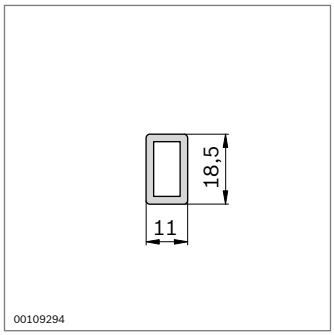

Insertion profile	L (mm)		No.
	3000	10	**3 842 146 902**

Material: PA; black

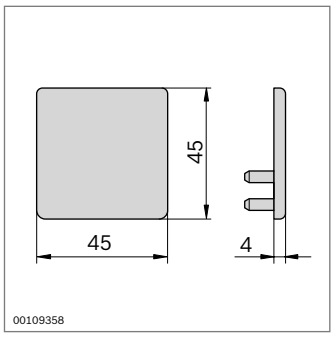

Cover cap

- As a design element and to prevent injuries

Cover cap	ESD		No.
		20	**3 842 242 404**

Material: PA, conductive, black

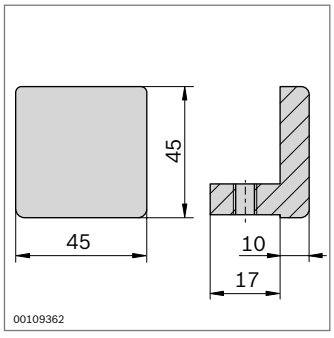

FS1

DIN 916
M8x16

End piece

- For use as a stop for sliding elements
- Clamping with setscrew in the profile slot

End piece	ESD		No.	FS
		20	**3 842 191 194**	FS1

Material: Die-cast aluminum
Scope of delivery: Incl. fastening material (FS)

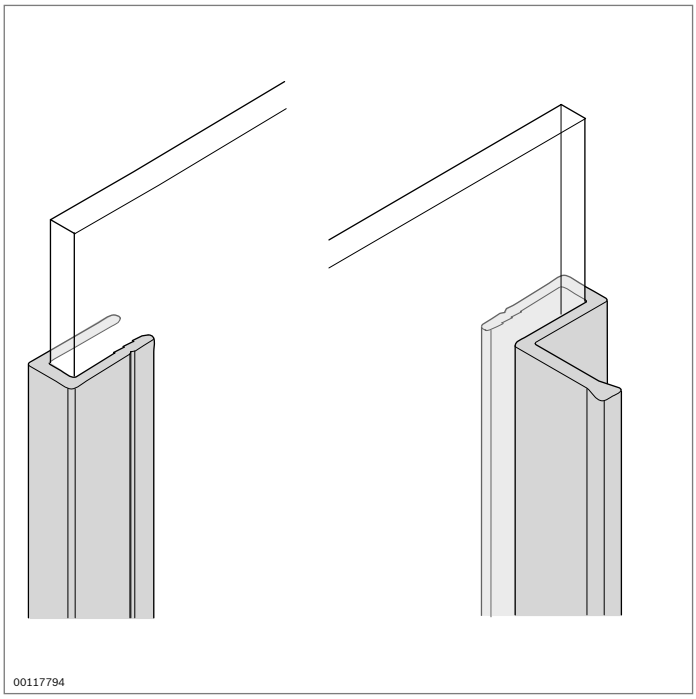

Edge protector
Door handle profile

- For reinforcing frameless surface elements on sliding doors
- Profile for s = 6 mm can also be used for 1/4 inch plates

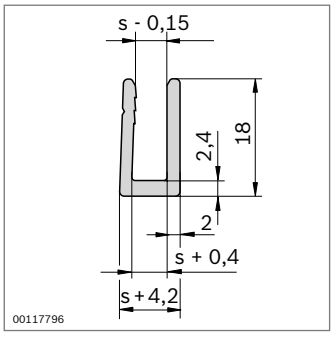

Edge protector		s (mm)	L (mm)	No.
1 pc		5	40 ... 3000	**3 842 993 429 / L**
10 pcs		5	3000	**3 842 536 537**
1 pc		6	40 ... 3000	**3 842 993 430 / L**
10 pcs		6	3000	**3 842 536 540**

Material: Aluminum, anodized

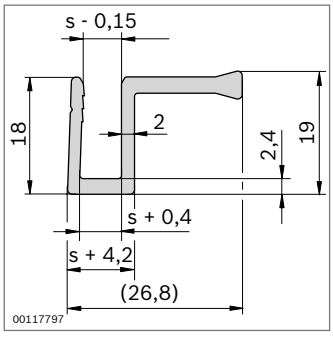

Door handle profile		s (mm)	L (mm)	No.
1 pc		5	40 ... 3000	**3 842 993 427 / L**
10 pcs		5	3000	**3 842 536 533**
1 pc		6	40 ... 3000	**3 842 993 428 / L**
10 pcs		6	3000	**3 842 536 536**

Material: Aluminum, anodized