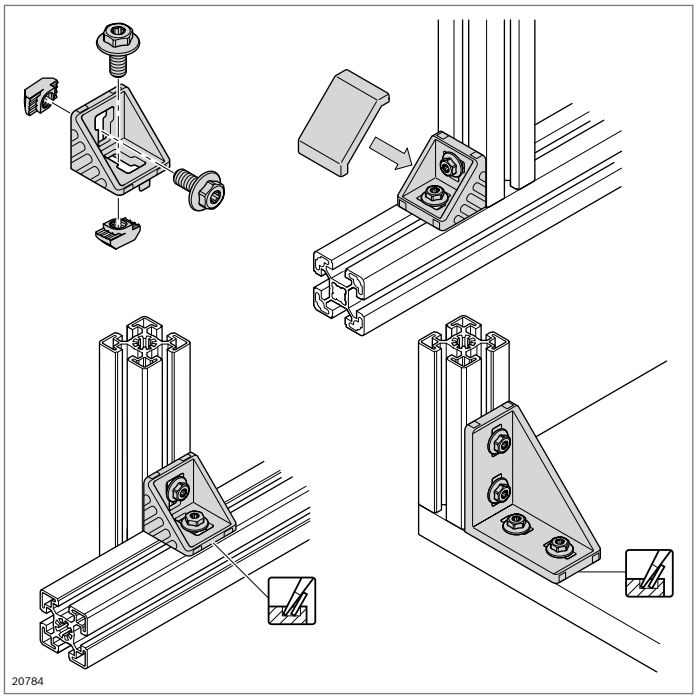

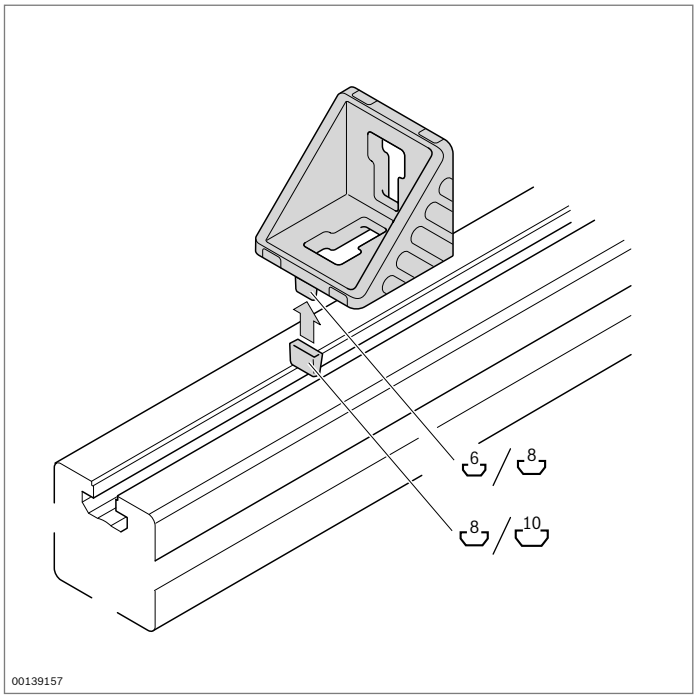

Bracket

designLINE

- Brackets with centering lugs for rapid, precise assembly with protection against turning
- Centering lugs can be easily broken off for assembly on plates or at right angles to the slot
- *designLINE* version with special silver paint (RAL 9006) for an attractive, high-quality design
- Intermediate element for positioning brackets in the next largest slot
- Offset sliding block for off-center positioning of the 45/45 bracket
- Cover cap to protect from dirt, available in signal gray (RAL 7004) and black ESD (RAL 9005)
- Profile machining: not required

Technical data (p. 19-9)

Notice: The collar screws enable the brackets to be assembled really quickly and easily (p. 3-5)

20/20

00109407

20/20	Slot	ESD		No.	FS
Set (standard)	6 / 6		1	**3 842 523 511**	2xFS1
designLINE set	6 / 6		1	**3 842 551 596**	2xFS1
Bracket (standard)	6		100	**3 842 523 508**	
Cap, signal gray			100	**3 842 548 842**	
Cap, black			100	**3 842 548 843**	
Adapter for 8 mm slot	6 / 8		100	**3 842 523 516**	

Material: Bracket: Diecast aluminum, vibratory ground
designLINE bracket: painted (RAL 9006)
Adapter: PA, black
Cap: PP
Fastening material: steel, galvanized

Scope of delivery: Set incl. fastening material (FS)

Model	F_{max}	M_{max}	M_{max}	M_{max}
20/20	700 N	6 Nm	25 Nm	–

FS1
DIN 7984
M4x8

20/40

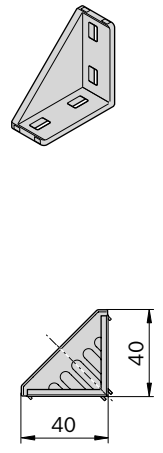

00109411

20/40	Slot	ESD		No.	FS
Set (standard)	6 / 6		1	**3 842 523 520**	4xFS1
designLINE set	6 / 6		1	**3 842 551 597**	4xFS1
Bracket (standard)	6		20	**3 842 523 517**	
Cap, signal gray			20	**3 842 548 844**	
Cap, black			20	**3 842 548 845**	
Adapter for 8 mm slot	6 / 8		100	**3 842 523 516**	

Material: Bracket: Diecast aluminum, vibratory ground
Bracket *designLINE*: painted (RAL 9006)
Adapter: PA; black
Cap: PP
Fastening material: steel, galvanized

Scope of delivery: Set incl. fastening material (FS)

Model	F_{max}	M_{max}	M_{max}	M_{max}
20/40	1400 N	15 Nm	50 Nm	8 Nm

FS1
DIN 7984
M4x8

20x28

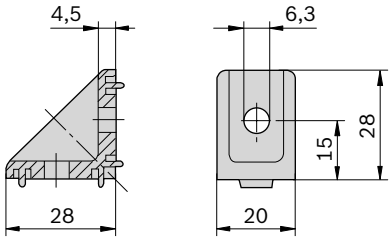

00125983

20x28	Slot	ESD		No.	FS
Set (standard)	8 / 8		1	**3 842 502 137**	2xFS1
Bracket (standard)	8		100	**3 842 501 587**	

Material: Diecast zinc
Fastening material: steel, galvanized
Scope of delivery: Set incl. fastening material (FS)

FS1

DIN 7984
M6x12

30/30

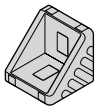

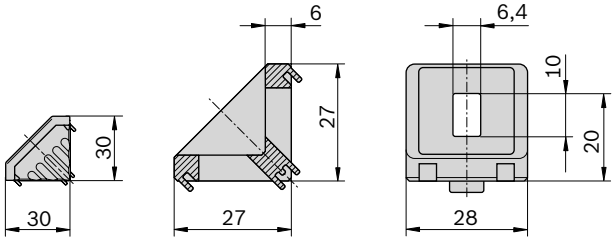

00109415

30/30	Slot	ESD		No.	FS
Set (standard)	8 / 8		1	**3 842 523 528**	2xFS2
	8 / 10		1	**3 842 523 530**	1xFS2, 2xFS3, 1xFS4
	10 / 10		1	**3 842 523 532**	4xFS3, 2xFS4
designLINE set	8 / 8		1	**3 842 551 598**	2xFS2
	8 / 10		1	**3 842 551 600**	1xFS2, 2xFS3, 1xFS4
	10 / 10		1	**3 842 551 599**	4xFS3, 2xFS4
Bracket (standard)	8		100	**3 842 523 525**	
Cap, signal gray			100	**3 842 548 846**	
Cap, black			100	**3 842 548 847**	
Adapter for 10 mm slot	8 / 10		100	**3 842 523 537**	

Material: Bracket: Diecast aluminum, vibratory ground
Bracket *designLINE*: painted (RAL 9006)
Adapter: PA, black
Cap: PP
Fastening material: steel, galvanized
Scope of delivery: Set incl. fastening material (FS)

Model	F_{max}	M_{max}	M_{max}	M_{max}
30/30	1250 N	25 Nm	75 Nm	–

FS2

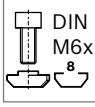

DIN 7984
M6x14

FS3

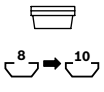

FS4

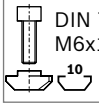

DIN 7984
M6x18

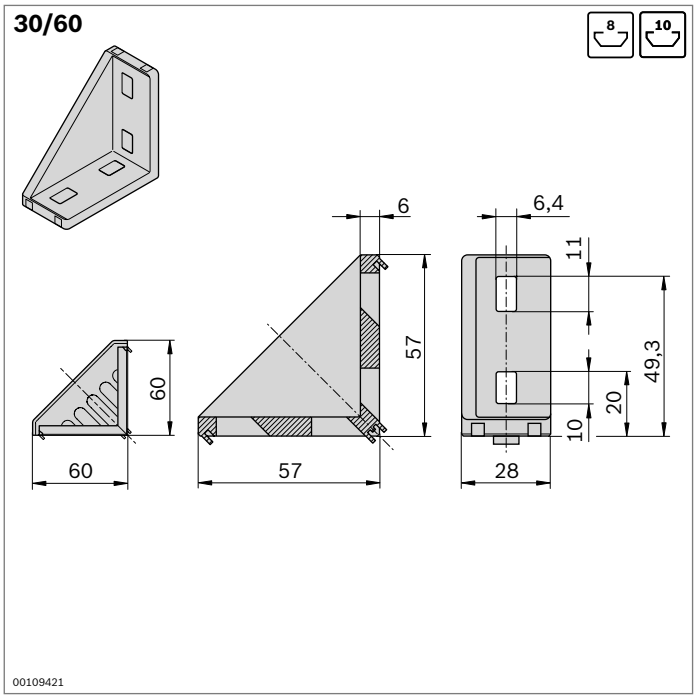

30/60	Slot	ESD		No.	FS
Set (standard)	8 / 8		1	**3 842 523 541**	4xFS2
designLINE set	8 / 8		1	**3 842 551 601**	4xFS2
Bracket (standard)	8		20	**3 842 523 538**	
Cap, signal gray			20	**3 842 548 848**	
Cap, black			20	**3 842 548 849**	
Adapter for 10 mm slot	8 / 10		100	**3 842 523 537**	

Material: Bracket: Diecast aluminum, vibratory ground
Bracket *designLINE*: painted (RAL 9006)
Adapter: PA, black
Cap: PP
Fastening material: steel, galvanized

Scope of delivery: Set incl. fastening material (FS)

Model	F_{max}	M_{max}	M_{max}	M_{max}
30/60	2500 N	100 Nm	170 Nm	25 Nm

FS2

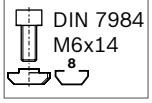

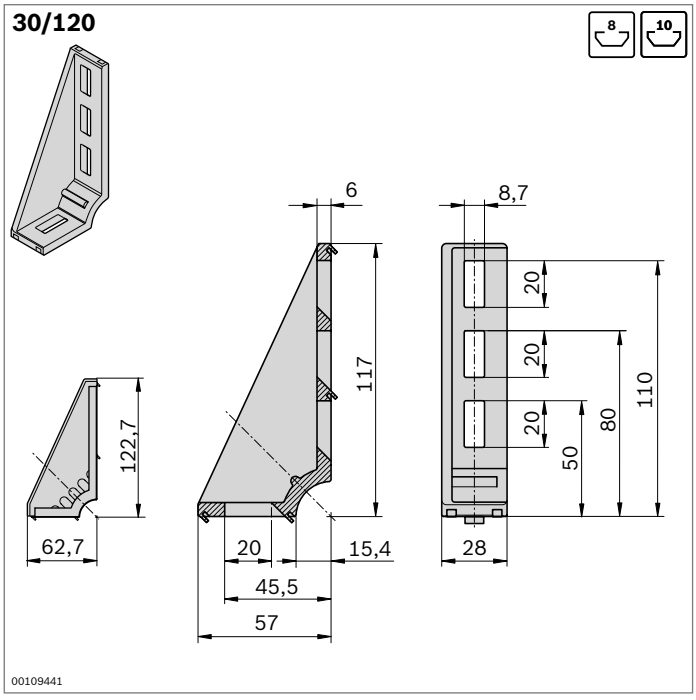

30/120	Slot	ESD		No.	FS
designLINE set	8 / 8		1	**3 842 551 602**	2xFS6
Bracket (standard)	8		20	**3 842 523 587**	
Cap, signal gray			20	**3 842 548 850**	
Cap, black			20	**3 842 548 851**	
Adapter for 10 mm slot	8 / 10		100	**3 842 523 537**	

Material: Bracket: Diecast aluminum, vibratory ground
Bracket *designLINE*: painted (RAL 9006)
Adapter: PA, black
Cap: PP
Fastening material: steel, galvanized

Scope of delivery: Set incl. fastening material (FS)

Model	F_{max}	M_{max}	M_{max}
30/120	3750 N	100 Nm	47 Nm

FS6

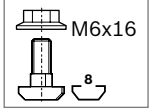

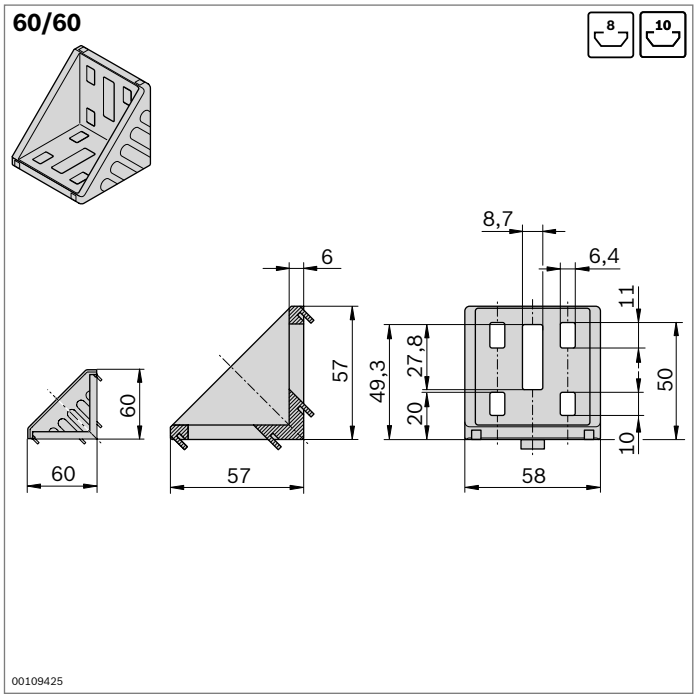

60/60	Slot	ESD		No.	FS
Set (standard)	8 / 8		1	**3 842 523 549**	8xFS2
	8 / 10		1	**3 842 523 551**	4xFS2, 1xFS5
	10 / 10		1	**3 842 523 553**	2xFS5
designLINE set	8 / 8		1	**3 842 551 609**	8xFS2
	8 / 10		1	**3 842 551 610**	4xFS2, 1xFS5
	10 / 10		1	**3 842 551 611**	2xFS5
Bracket (standard)	8		20	**3 842 523 546**	
Cap, signal gray			20	**3 842 548 852**	
Cap, black			20	**3 842 548 853**	
Adapter for 10 mm slot	10		100	**3 842 523 537**	

Material: Bracket: Diecast aluminum, vibratory ground
Bracket *designLINE*: painted (RAL 9006)
Adapter: PA; black
Cap: PP
Fastening material: steel, galvanized

Scope of delivery: Set incl. fastening material (FS)

Model	Slot	F_{max}	M_{max}	M_{max}	M_{max}
60/60	8	5000 N	320 Nm	370 Nm	110 Nm
	10	3000 N	125 Nm	150 Nm	–

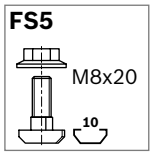

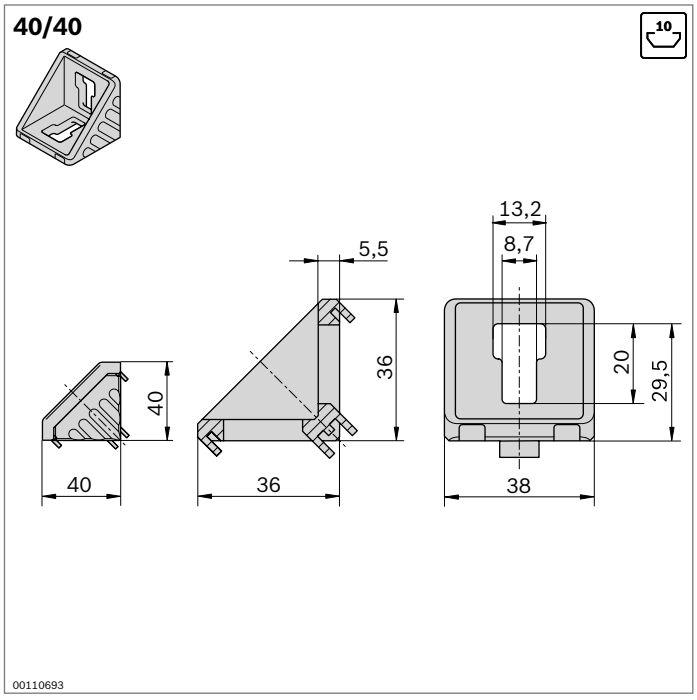

40/40	Slot	ESD		No.	FS
Set (standard)	10 / 10		1	**3 842 529 383**	2xFS5
designLINE set	10 / 10		1	**3 842 551 603**	2xFS5
Bracket (standard)	10		100	**3 842 528 967**	
Cap, signal gray			100	**3 842 548 854**	
Cap, black			100	**3 842 548 855**	

Material: Bracket: Diecast aluminum, vibratory ground
Bracket *designLINE*: painted (RAL 9006)
Cap: PP
Fastening material: steel, galvanized

Scope of delivery: Set incl. fastening material (FS)

Model	F_{max}	M_{max}	M_{max}	M_{max}
40/40	3000 N	55 Nm	145 Nm	35 Nm

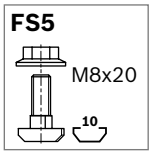

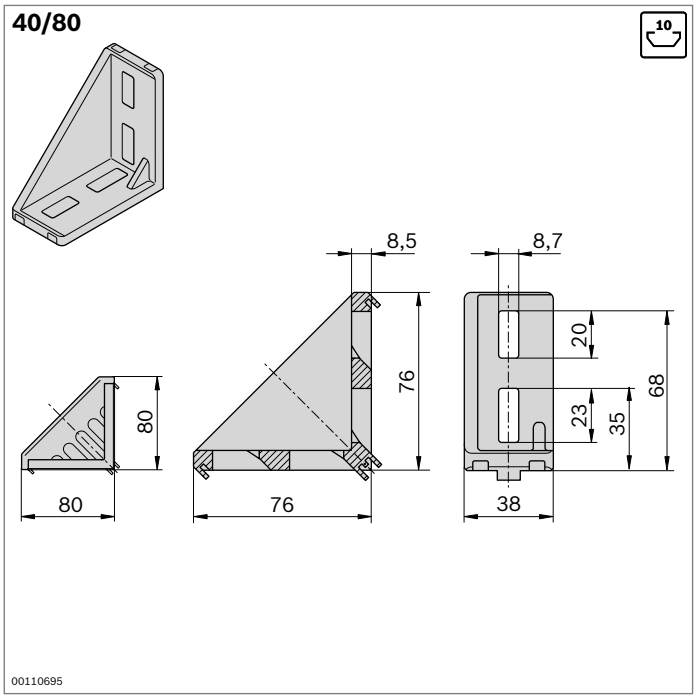

40/80	Slot	ESD		No.	FS
Set (standard)	10 / 10		1	**3 842 529 386**	4xFS7
designLINE set	10 / 10		1	**3 842 551 604**	4xFS7
Bracket (standard)	10		20	**3 842 529 005**	
Cap, signal gray			20	**3 842 548 856**	
Cap, black			20	**3 842 548 857**	

Material: Bracket: Diecast aluminum, vibratory ground
designLINE bracket: painted (RAL 9006)
Cap: PP
Fastening material: steel, galvanized

Scope of delivery: Set incl. fastening material (FS)

Model	F_{max}	M_{max}	M_{max}	M_{max}
40/80	6000 N	180 Nm	400 Nm	60 Nm

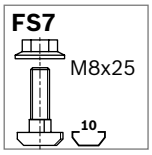

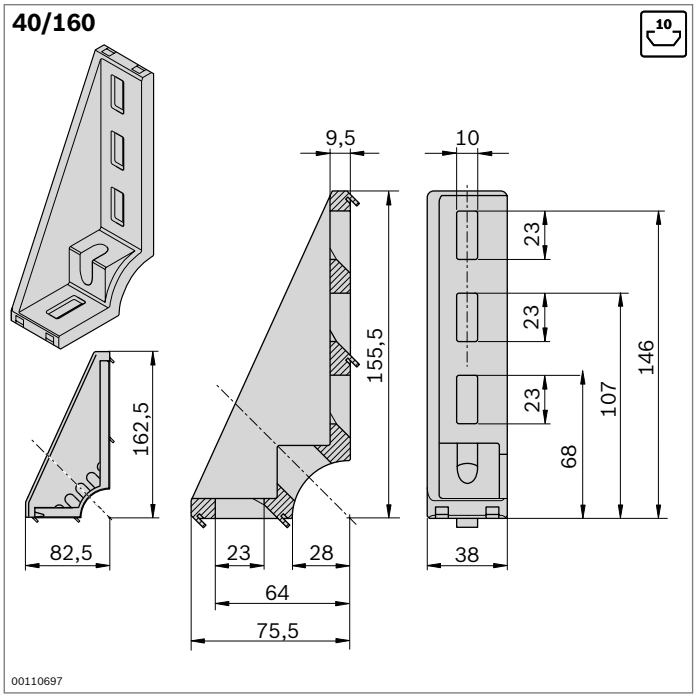

40/160	Slot	ESD		No.	FS
designLINE set	10 / 10		1	**3 842 551 605**	2xFS7
Bracket (standard)	10		20	**3 842 529 006**	
Cap, signal gray			20	**3 842 548 858**	
Cap, black			20	**3 842 548 859**	

Material: Bracket: Diecast aluminum, vibratory ground
Bracket *designLINE*: painted (RAL 9006)
Cap: PP
Fastening material: steel, galvanized

Scope of delivery: Set incl. fastening material (FS)

Model	F_{max}	M_{max}	M_{max}
40/160	9000 N	250 Nm	60 Nm

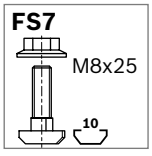

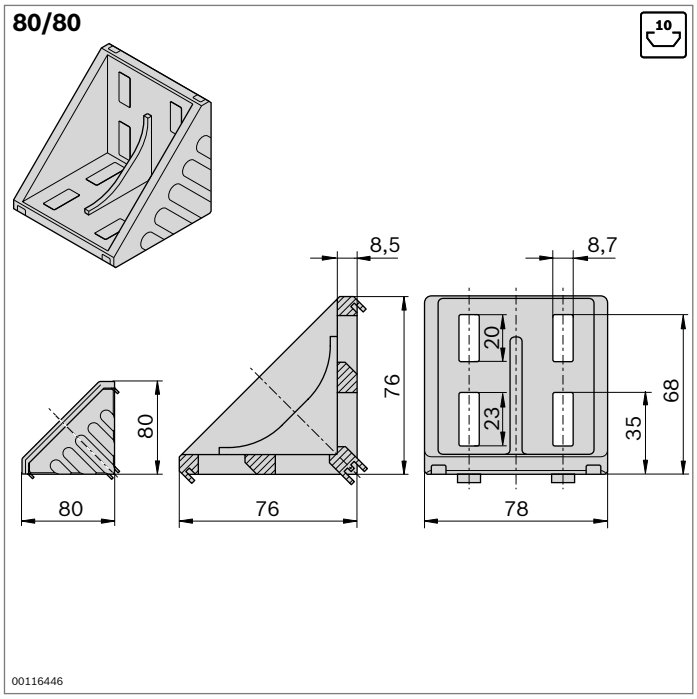

80/80	Slot	ESD		No.	FS
Set (standard)	10 / 10		1	**3 842 530 360**	8xFS7
designLINE set	10 / 10		1	**3 842 551 612**	8xFS7
Bracket (standard)	10		20	**3 842 530 231**	
Cap, signal gray			20	**3 842 548 860**	
Cap, black			20	**3 842 548 861**	

Material: Bracket: Diecast aluminum, vibratory ground
Bracket *designLINE*: painted (RAL 9006)
Cap: PP
Fastening material: steel, galvanized

Scope of delivery: Set incl. fastening material (FS)

Model	F_{max}	M_{max}	M_{max}	M_{max}
80/80	14000 N	500 Nm	1000 Nm	400 Nm

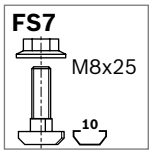

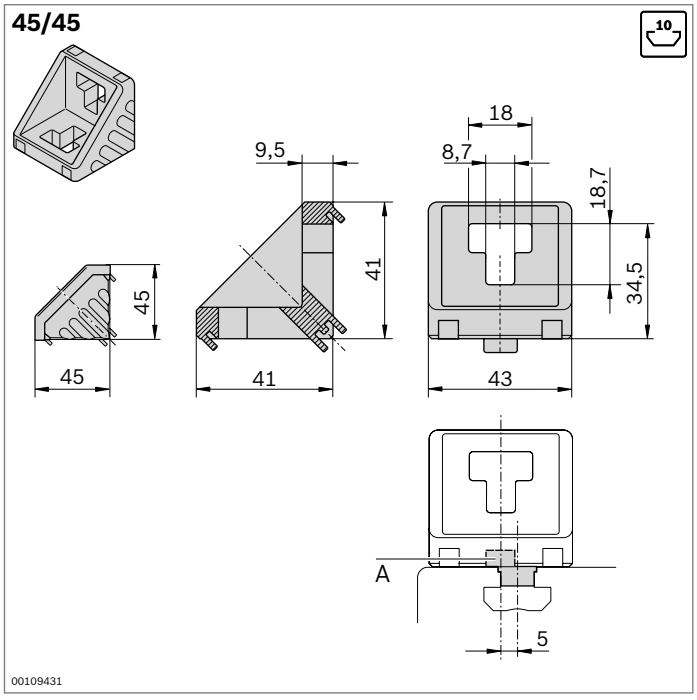

45/45	Slot	ESD		No.	FS
Set (standard)	10 / 10		1	**3 842 523 561**	2xFS7
designLINE set	10 / 10		1	**3 842 551 606**	2xFS7
Bracket (standard)	10		100	**3 842 523 558**	
Cap, signal gray			100	**3 842 548 862**	
Cover cap, black			100	**3 842 548 863**	
Sliding block, offset (**A**)	10		100	**3 842 523 593**	

Material: Bracket: Diecast aluminum, vibratory ground
Bracket *designLINE*: painted (RAL 9006)
Sliding block, offset: PA, black
Cap: PP
Fastening material: steel, galvanized

Scope of delivery: Set incl. fastening material (FS)

Model	F_{max}	M_{max}	M_{max}	M_{max}
45/45	3000 N	60 Nm	160 Nm	–

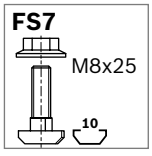

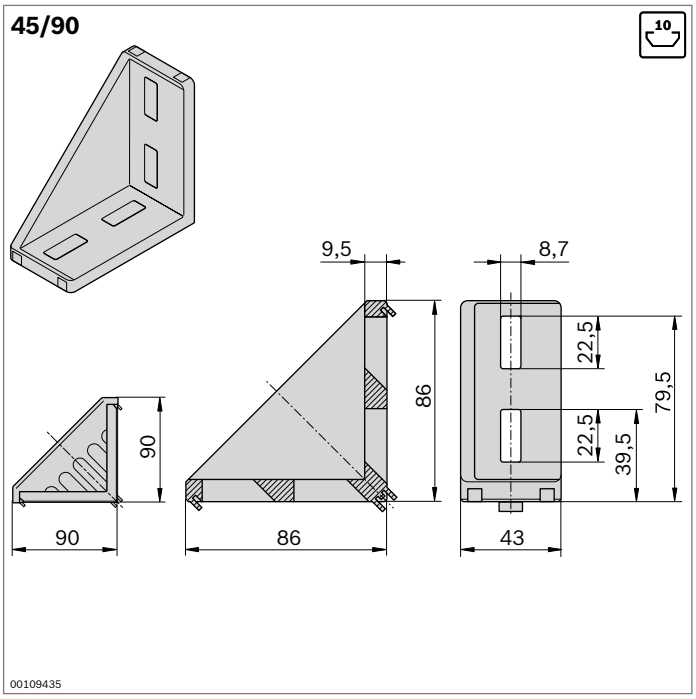

45/90	Slot	ESD		No.	FS
Set (standard)	10 / 10		1	**3 842 523 570**	4xFS7
designLINE set	10 / 10		1	**3 842 551 607**	4xFS7
Bracket (standard)	10		100	**3 842 523 567**	
Cap, signal gray			100	**3 842 548 864**	
Cap, black			100	**3 842 548 865**	

Material: Bracket: Diecast aluminum, vibratory ground
designLINE bracket: painted (RAL 9006)
Cap: PP
Fastening material: steel, galvanized

Scope of delivery: Set incl. fastening material (FS)

Model	F_{max}	M_{max}	M_{max}	M_{max}
45/90	6000 N	180 Nm	400 Nm	60 Nm

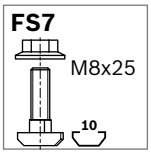

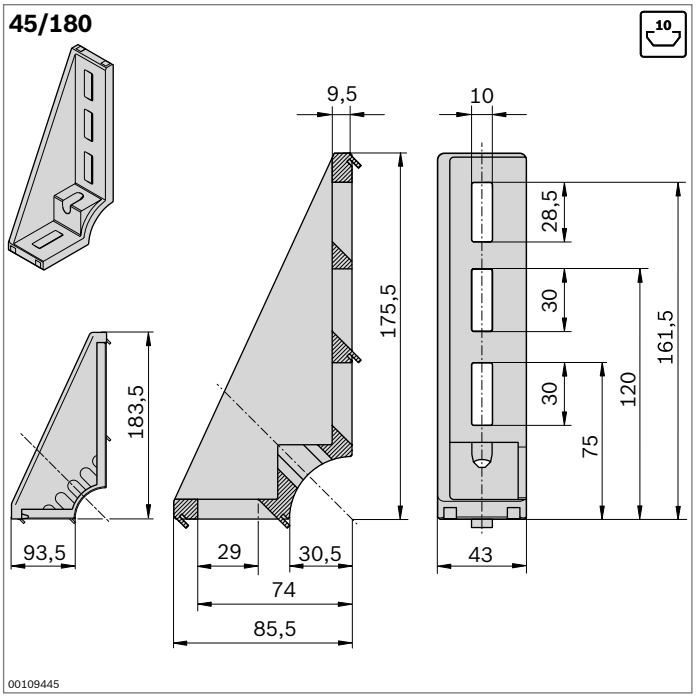

45/180	Slot	ESD		No.	FS
designLINE set	10 / 10		1	**3 842 551 608**	2xFS7
Bracket (standard)	10		20	**3 842 523 583**	
Cap, signal gray			20	**3 842 548 866**	
Cap, black			20	**3 842 548 867**	

Material: Bracket: Diecast aluminum, vibratory ground
Bracket *designLINE*: painted (RAL 9006)
Cap: PP
Fastening material: steel, galvanized

Scope of delivery: Set incl. fastening material (FS)

Model	F_{max}	M_{max}	M_{max}
45/180	9000 N	250 Nm	65 Nm

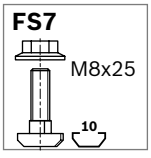

90/90

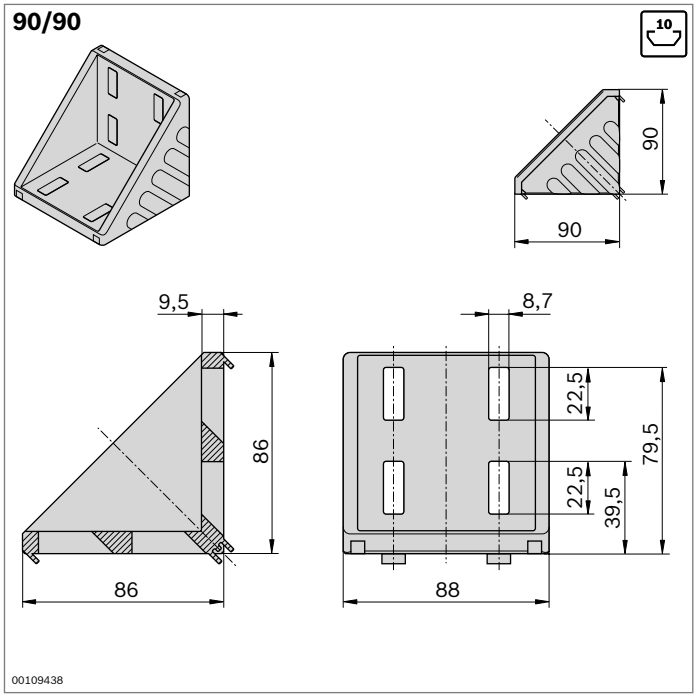

90/90	Slot	ESD		No.	FS
Set (standard)	10 / 10		1	**3 842 523 578**	8xFS7
designLINE set	10 / 10		1	**3 842 551 613**	8xFS7
Bracket (standard)	10		20	**3 842 523 575**	
Cap, signal gray			20	**3 842 548 868**	
Cap, black			20	**3 842 548 869**	

Material: Bracket: Diecast aluminum, vibratory ground
designLINE bracket: painted (RAL 9006)
Cap: PP
Fastening material: steel, galvanized

Scope of delivery: Set incl. fastening material (FS)

Model	F_{max}	M_{max}	M_{max}	M_{max}
90/90	12000 N	370 Nm	800 Nm	200 Nm

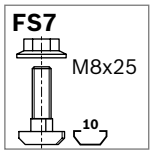

43x42

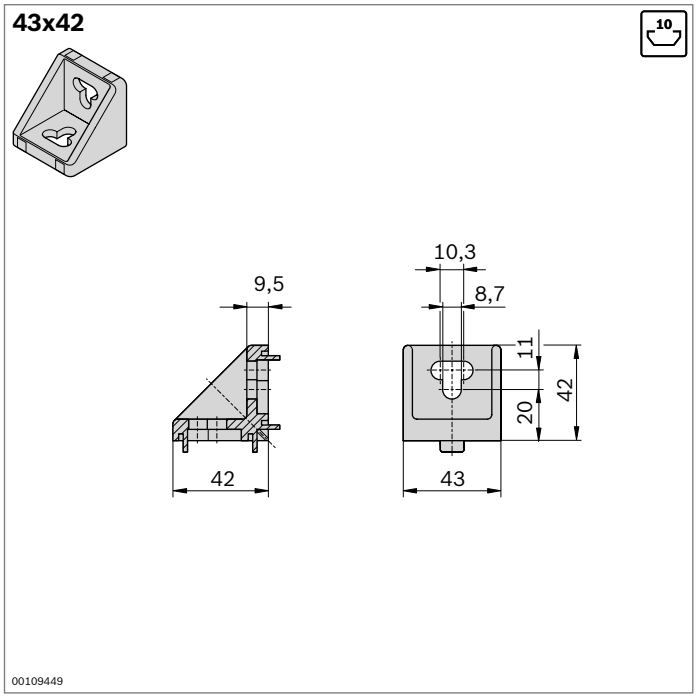

43x42	Slot	ESD		No.	FS
Set (standard)	10 / 10		1	**3 842 352 009**	2xFS7
Bracket (standard)	10		100	**3 842 348 526**	

Material: Bracket: Die-cast aluminum
Fastening material: steel, galvanized

Scope of delivery: Set incl. fastening material (FS)

Model	F_{max}	M_{max}	M_{max}	M_{max}
43x42	2000 N	–	160 Nm	–

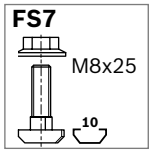

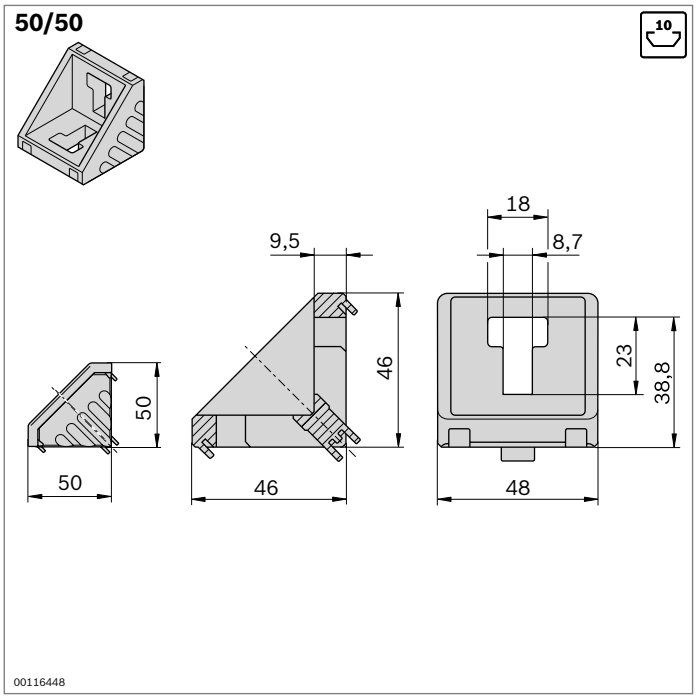

50/50	Slot	ESD		No.	FS
Set (standard)	10 / 10		1	**3 842 530 259**	2xFS7
Bracket (standard)	10		20	**3 842 530 381**	
Cap, signal gray			20	**3 842 548 870**	
Cap, black			20	**3 842 548 871**	

Material: Bracket: Diecast aluminum, vibratory ground
Cover cap: PP
Fastening material: steel, galvanized

Scope of delivery: Set incl. fastening material (FS)

Model	F_{max}	M_{max}	M_{max}	M_{max}
50/50	4000 N	125 Nm	250 Nm	38 Nm

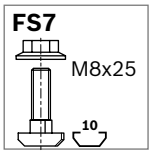

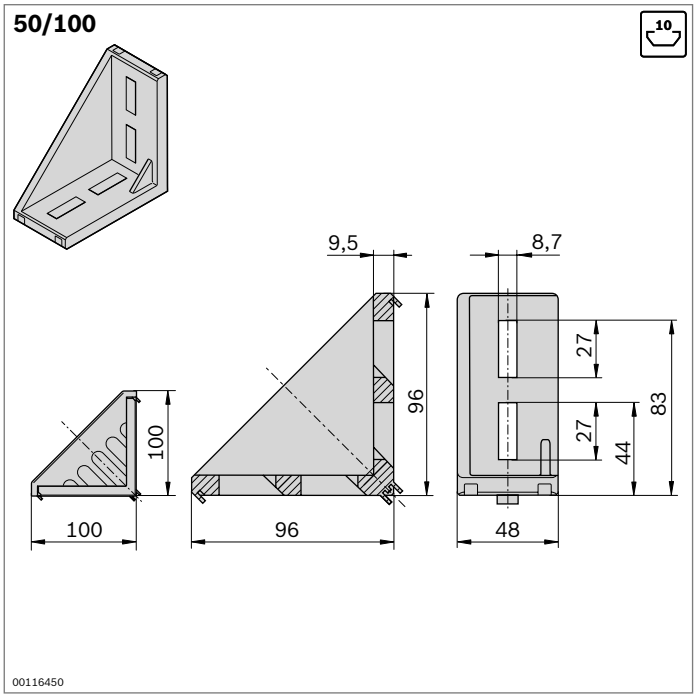

50/100	Slot	ESD		No.	FS
Set (standard)	10 / 10		1	**3 842 530 260**	4xFS7
Bracket (standard)	10		20	**3 842 530 382**	
Cap, signal gray			20	**3 842 548 872**	
Cap, black			20	**3 842 548 873**	

Material: Bracket: Diecast aluminum, vibratory ground
Cap: PP
Fastening material: steel, galvanized

Scope of delivery: Set incl. fastening material (FS)

Model	F_{max}	M_{max}	M_{max}	M_{max}
50/100	7500 N	300 Nm	600 Nm	73 Nm

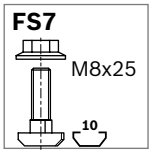

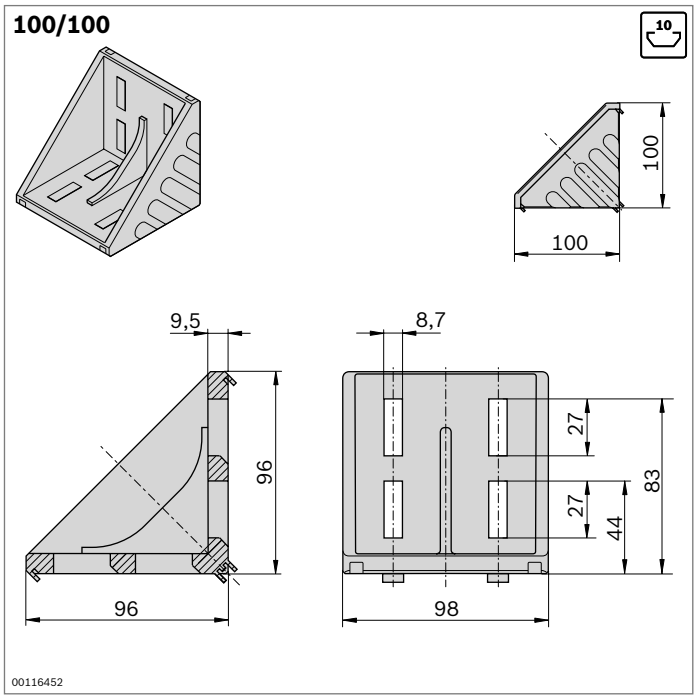

100/100	Slot	ESD		No.	FS
Set (standard)	10 / 10		1	**3 842 530 361**	8xFS7
Bracket (standard)	10		20	**3 842 530 460**	
Cap, signal gray			20	**3 842 548 874**	
Cap, black			20	**3 842 548 875**	

Material: Bracket: Diecast aluminum, vibratory ground
Cap: PP
Fastening material: steel, galvanized

Scope of delivery: Set incl. fastening material (FS)
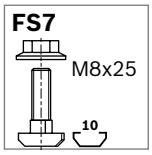
Model	Fmax	Mmax	Mmax	Mmax
100/100	15000 N	550 Nm	1100 Nm	480 Nm